PRESSURE SWITCH

PRODUCT CATALOGUE

PRESSURE at the highest **LEVEL.**

BD|SENSORS
pressure measurement

>> www.bdsensors.de

PRESSURE AT THE HIGHEST LEVEL

"Successful medium-sized companies are not successful because they are active in many areas, but rather because they concentrate on one area and do it better than anyone else."

This is our philosophy. That´s why BD|SENSORS has concentrated on electronic pressure measurement technology from the beginning.

With our unremitting product and and quality strategy we have been successful in becoming a major player on the world market for electronic pressure sensing devices within a few years.

This document contains product specifications; properties are not guaranteed. Detailed information about options are defined in the datasheet. Subject to change without notice.

With 360 employees at 3 locations in Germany, the Czech Republic and China BD|SENSORS has solutions from 0.1 mbar up to 6.000 bar:

- pressure sensors, pressure transducers pressure transmitters
- electronic pressure switches
- pressure measuring devices with display and switching outputs
- hydrostatic level probes

Two pressure transmitters and a submersible probe, based on a stainless steel silicon sensor were the beginning. Today the range extends to more than 100 standard products, from economical OEM devices to high-end products with HART® communication or field bus interface.

In addition we have developed hundreds of customer-specific applications, underlining the competence and flexibility of BD|SENSORS. The excellent price/performance ratio of our products is proof of the fact that we are able to meet the toughest demand: Being a problem-solver for our customers.

INDEX

PRESSURE SWITCH WITH DISPLAY 5-85

INDUSTRY 5-79

OEM 80-85

PRESSURE SWITCH WITHOUT DISPLAY 86-99

OEM 86-99

4 ADVANTAGES 100

For large production batches as well as for small production numbers, no matter for what medium or external factors, with almost any mechanical or electrical connection - we solve your problem

flexibly, quickly and cost-efficiently.

MATRIX

	PRODUCT	PREFERRED APPLICATION		MEDIA WETTED PARTS						NOMINAL PRESSURE		ACCURACY	OUTPUT SIGNAL			HOUSING DISPLAY		APPROVAL				
				pressure connection		Sensor diaphragm		Sensor seal														
		general purpose	hygienic	metal	plastic	stainless steel	ceramic	elastomer	without, welded	bar min	bar max	% FSO (standard)	contact 1 / 2	contact 1 / 2 / 4	analogue output mA / V	stainless steel	plastic	EX	UL	IO-Link	3A	EHEDG
with display																						
INDUSTRY	DS 200	•		•		•		•	•	0.1	600	≤± 0.35		•	•		•	•	•			
	DS 201	•		•	•		•	•		0.4	600	≤± 0.50		•	•	•	•	•	•			
	DS 202	•		•		•			•	6	600	≤± 0.50		•	•		•	•	•			
	DS 210	•		•		•		•		0.01	1	≤± 0.35		•	•		•	•	•			
	DS 214	•		•		•			•	600	2200	≤± 0.35		•	•		•					
	DS 233	•		•		•		•		0.006	1	≤± 0.35					•					
	DS 350	•		•		•		•	•	0.1	600	≤± 0.50					•			•		
	DS 351	•		•	•		•	•		0.4	600	≤± 0.50					•			•		
	DS 400	•		•		•		•	•	0.1	600	≤± 0.35	•		•	•		•	•			
	DS 401	•		•	•		•	•		0.4	600	≤± 0.50	•		•	•		•	•			
	DS 200 P		•	•		•		•	•	0.1	40	≤± 0.35		•	•		•	•	•		•	•
	DS 201 P		•	•		•		•		60	400	≤± 0.50		•	•		•	•	•			
	DS 350 P		•	•		•		•	•	0.001	40	≤± 0.50					•			•	•	•
	DS 400 P		•	•		•		•	•	0.1	40	≤± 0.35	•		•	•		•	•		•	•
OEM	DS 217	•		•		•			•	6	600	≤± 0.50					•		•			
	DS 230	•		•			•	•		2	400	≤± 1.50					•		•			
without display																						
OEM	iS 4			•		•		•		1 | -1	10 | 0	≤± 0.50	•							•		
	DS 4			•		•		•		1 | -1	10 | 0	≤± 1.00	•									
	DS 5			•		•			•	16	600	≤± 0.50										
	DS 6			•			•	•		2	400	≤± 1.00							•			

DS 200

Electronic Pressure Switch

Stainless Steel Sensor

accuracy according to IEC 60770:
standard: 0.35 % FSO
option: 0.25 % FSO

Nominal pressure

from 0 ... 100 mbar up to 0 ... 600 bar

Contacts

1, 2 or 4 independent PNP contacts,
freely configurable

Analogue output

2-wire: 4 ... 20 mA
3-wire: 4 … 20 mA / 0 … 10 V
others on request

Special characteristics

- indication of measured values on a 4-digit LED display
- rotatable and configurable display module

Optional versions

- **IS-version**
  Ex ia = intrinsically safe for gases
- pressure sensor welded
- customer specific versions

The electronic pressure switch DS 200 is the successful combination of

- intelligent pressure switch
- digital display

and has been specially designed for numerous applications in various industrial sectors.

As standard the DS 200 offers a PNP contact and a rotatable display module with 4-digit LED display. Optional versions like e.g. an intrinsically safe version, max. four contacts and an analogue output complete the profile.

Preferred areas of use are

- Plant and machine engineering
- Heating and air conditioning
- Environmental engineering (water – sewage – recycling)

DS 200

Technical Data

Input pressure range											
Nominal pressure gauge[1]	[bar]	-1…0	0.10	0.16	0.25	0.40	0.60	1	1.6	2.5	4	6
Nominal pressure abs.	[bar]	-	-	-	-	0.40	0.60	1	1.6	2.5	4	6
Level gauge [1]	[mH_2O]	-	1	1.6	2.5	4	6	10	16	25	40	60
Overpressure	[bar]	5	0.5	1	1	2	5	5	10	10	20	40
Burst pressure ≥	[bar]	7.5	1.5	1.5	1.5	3	7.5	7.5	15	15	25	50

Nominal pressure gauge [1] / absolute	[bar]	10	16	25	40	60	100	160	250	400	600
Level gauge [1]	[mH_2O]	100	160	250	400	600	-	-	-	-	-
Overpressure	[bar]	40	80	80	105	210	210	600	1000	1000	1000
Burst pressure ≥	[bar]	50	120	120	210	420	420	1000	1250	1250	1250
Vacuum resistance		p_N ≥ 1 bar: unlimited vacuum resistance; p_N < 1 bar: on request									

[1] from 60 bar: measurement starts with ambient pressure

Contact [2]	
Standard	1 PNP contact
Options	2 independent PNP contacts 4 independent PNP contacts (possible with M12x1, 8-pin for 4 ... 20 mA/3-wire; 0 ... 10 V/3-wire on request)
Max. switching current	4 ... 20 mA / 2- and 3-wire: contact rating 125 mA, short-circuit resistant; $V_{switch} = V_S - 2V$ 0 ... 10 V / 3-wire: contact rating 125 mA, short-circuit resistant
Accuracy of contacts [3]	standard: p_N < 0.4 bar: ≤ ± 0.5 % FSO; p_N ≥ 0.4 bar: ≤ ± 0.35 % FSO option: p_N ≥ 0.4 bar: ≤ ± 0.25 % FSO
Repeatability	≤ ± 0.1 % FSO
Switching frequency	max. 10 Hz
Switching cycles	> 100 x 10^6
Delay time	0 ... 100 sec

[2] max. 1 contact for 2-wire current signal with plug ISO 4400 as well as 2-wire current signal with IS-protection
no contact possible with 3-wire in combination with plug ISO 4400

Analogue output (optionally) / Supply	
2-wire current signal	4 ... 20 mA / V_S = 13 ... 36 V_{DC} permissible load: $R_{max} = [(V_S - V_{S\,min}) / 0.02\ A]\ \Omega$ response time: < 10 msec
2-wire current signal with IS-protection	4 ... 20 mA / V_S = 15 ... 28 V_{DC} permissible load: $R_{max} = [(V_S - V_{S\,min}) / 0.02\ A]\ \Omega$ response time: < 10 msec
3-wire current signal	4 ... 20 mA / V_S = 19 ... 30 V_{DC} adjustable (turn-down of span 1:5) [4] permissible load: R_{max} = 500 Ω response time: < 3 sec
3-wire voltage signal	0 … 10 V / V_S = 15 ... 36 V_{DC} permissible load: R_{min} = 10 kΩ response time: < 3 msec
without analogue output	V_S = 15 ... 36 V_{DC}
Accuracy [3]	standard: p_N < 0.4 bar: ≤ ± 0.5 % FSO; p_N ≥ 0.4 bar: ≤ ± 0.35 %FSO option: p_N ≥ 0.4 bar: ≤ ± 0.25 % FSO

[3] accuracy according to IEC 60770 – limit point adjustment (non-linearity, hysteresis, repeatability)
[4] with turn-down of span the analogue signal is adjusted automatically to the new measuring range

Thermal effects (offset and span)				
Nominal pressure p_N	[bar]	-1 … 0	< 0.40	≥ 0.40
Tolerance band	[% FSO]	≤ ± 0.75	≤ ± 1	≤ ± 0.75
in compensated range	[°C]	-20 ... 85	0 ... 70	-20 … 85

Permissible temperatures	
Medium	-40 ... 125 °C
Electronics / environment	-40 ... 85 °C
Storage	-40 ... 100 °C

Electrical protection	
Short-circuit protection	permanent
Reverse polarity protection	no damage, but also no function
Electromagnetic compatibility	emission and immunity according to EN 61326

Mechanical stability		
Vibration	10 g RMS (25 ... 2000 Hz)	according to DIN EN 60068-2-6
Shock	500 g / 1 msec	according to DIN EN 60068-2-27

Materials			
Pressure port	stainless steel 1.4404 (316 L)		
Housing	stainless steel 1.4404 (316 L)		
Display housing	PA 6.6, polycarbonate		
Seals (media wetted)	standard: FKM	option: welded version [5]	others on request
Diaphragm	stainless steel 1.4435 (316 L)		
Media wetted parts	pressure port, seals, diaphragm		

[5] welded version only for pressure ports according to EN 837 and NPT; possible for nominal pressure ranges p_N ≤ 40 bar

Explosion protection (only for 4 … 20 mA / 2-wire)	
Approval AX14-DS 200	IBExU 06 ATEX 1050 X zone 1: II 2G Ex ia IIC T4 Gb
Safety technical maximum values	U_i = 28 V, I_i = 93 mA, P_i = 660 mW, C ≈ 0 nF, L_i ≈ 0 µH
Max. switching current [6]	70 mA
Permissible temperatures for environment	-25 ... 70 °C
Connecting cables (by factory)	cable capacitance: signal line/shield also signal line/signal line: 100 pF/m cable inductance: signal line/shield also signal line/signal line: 1 µH/m

[6] the real switching current in the application depends on the power supply unit

Miscellaneous	
Display	4-digit, red 7-segment-LED display digit height 7 mm range of indication -1999 ... +9999 accuracy 0.1 % ± 1 digit digital damping 0.3 … 30 sec (programmable); measured value update 0.0 … 10 sec (programmable)
Current consumption (without contacts)	2-wire signal output current: max. 25 mA 3-wire signal output current: approx. 45 mA + signal current 3-wire signal output voltage: approx. 45 mA
Ingress protection	IP 65
Installation position	any [7]
Weight	min. 160 g (depending on mechanical connection)
Operational life	100 million load cycles
CE-conformity	EMC Directive: 2014/30/EU Pressure Equipment Directive: 2014/68/EU (module A) [8]
ATEX Directive	2014/34/EU

[7] Pressure switches are calibrated in a vertical position with the pressure connection down. If this position is changed on installation there can be slight deviation in the zero point for pressure ranges p_N ≤ 1 bar.
[8] This directive is only valid for devices with maximum permissible overpressure > 200 bar

Wiring diagrams

2-wire-system (current)

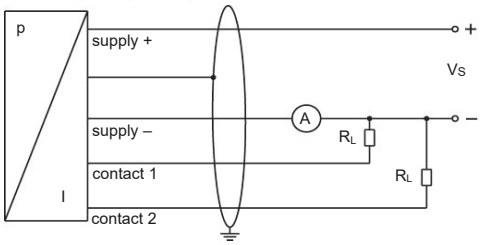

3-wire-system (current/voltage)

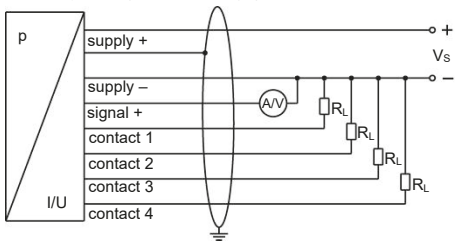

Pin configuration

Electrical connection	M12x1 plastic (5-pin)	M12x1 metal (5-pin)	M12x1 plastic (8-pin)	ISO 4400	Binder series 723 (5-pin)
Supply +	1	1	1	1	1
Supply –	3	3	3	2	3
Signal + (only 3-wire)	2	2	2	3	2
Contact 1	4	4	4	3	4
Contact 2	5	5	5	-	5
Contact 3	-	-	6	-	-
Contact 4	-	-	7	-	-
Shield	via pressure port	plug housing/ pressure port	via pressure port	ground contact	plug housing/ pressure port

Electrical connections (dimensions mm / in)

M12x1 plastic
(5-pin)

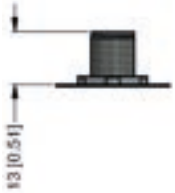

M12x1 metal
(5-pin)

M12x1 plastic
(8-pin)

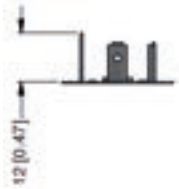

ISO 4400

Binder series 723
(5-pin)

Dimensions (mm / in)

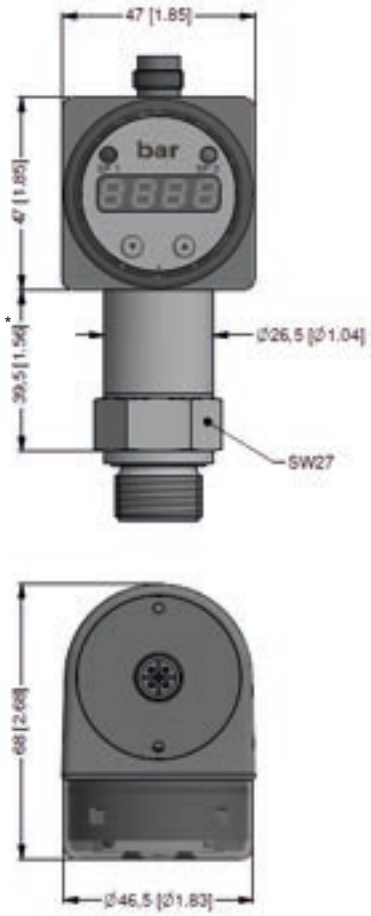

rotatability of display module

* for nominal pressure p_N > 400 bar increases the length of device by 19 mm (without explosion protection) or by 39 mm (with explosion protection)

Mechanical connection (dimensions mm / in)

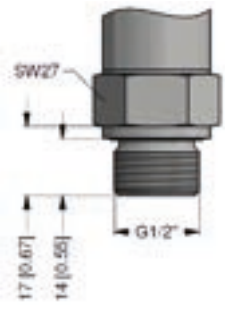

G1/2" DIN 3852

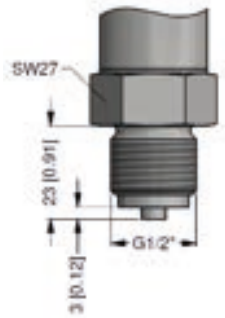

G1/2" EN 837

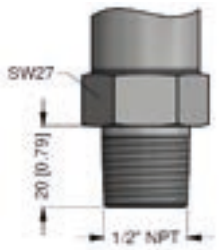

1/2" NPT

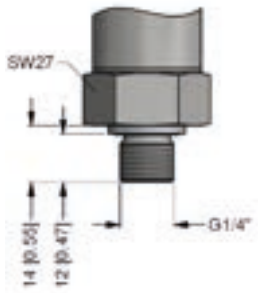

G1/4" DIN 3852

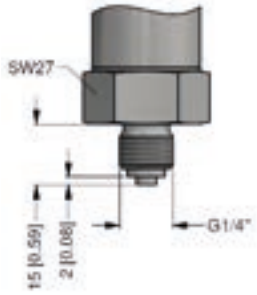

G1/4" EN 837

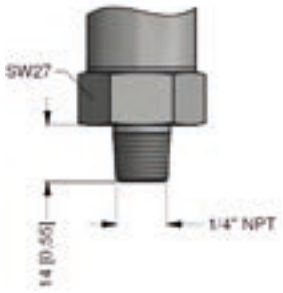

1/4" NPT

G3/4" flush DIN 3852
(0.1 bar ≤ p_N ≤ 40 bar)

length of device: 87.5 mm (without plug)

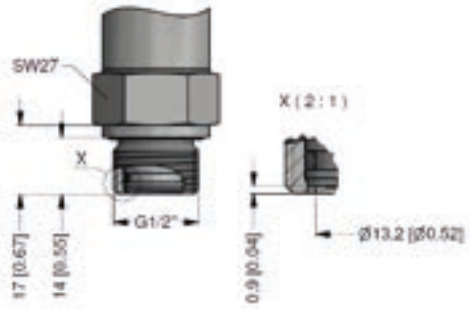

G1/2" flush DIN 3852
(0.1 bar ≤ p_N ≤ 40 bar)

length of device: 103 mm (without plug)

⇨ **metric threads and other versions on request**

DS 200

Ordering Code

Ordering code DS 200

DS 200 ☐☐☐-☐☐☐☐-☐-☐-☐-☐☐☐-☐☐☐-☐-☐☐☐

Pressure			
gauge in bar [1]		780	
gauge in mH_2O [1]		78H	
absolute in bar [2]		781	
Input	**[mH_2O]**	**[bar]**	
	1.0	0.10 [2]	1000
	1.6	0.16 [2]	1600
	2.5	0.25 [2]	2500
	4.0	0.40	4000
	6.0	0.60	6000
	10	1.0	1001
	16	1.6	1601
	25	2.5	2501
	40	4.0	4001
	60	6.0	6001
	100	10	1002
	160	16	1602
	250	25	2502
	400	40	4002
	600	60	6002
		100	1003
		160	1603
		250	2503
		400	4003
		600	6003
		-1 … 0	X102
		customer	9999 consult
Analogue output			
without			0
4 … 20 mA / 2-wire			1
0 … 10 V / 3-wire			3
4 … 20 mA / 3-wire, adjustable			7J
intrinsic safety 4 … 20 mA / 2-wire [3]			E
customer			9 consult
Contact			
1 contact [3, 4]			1
2 contacts [3, 4]			2
4 contacts [5]			4 consult
Accuracy			
standard for p_N > 0.4 bar:		0.35 % FSO	3
standard for p_N ≤ 0.4 bar:		0.50 % FSO	5
option for p_N ≥ 0.4 bar:		0.25 % FSO	2
customer			9 consult
Electrical connection			
male plug M12x1 (5-pin) / plastic version			N01
male plug M12x1 (8-pin) / plastic version [5]			M50
male plug M12x1 (5-pin) / metal version			N11
male and female plug ISO 4400 [4]			100
male plug Binder series 723 (5-pin)			204
customer			999 consult
Mechanical connection			
G1/2" DIN 3852			100
G1/2" EN 837			200
G1/4" DIN 3852			300
G1/4" EN 837			400
G1/2" DIN 3852 with flush sensor [6]			F00
G3/4" DIN 3852 with flush sensor [6]			K00
1/2" NPT			N00
1/4" NPT			N40
customer			999 consult
Seal			
FKM			1
without (welded version) [7]			2
customer			9 consult
Special version			
standard			000
customer			999 consult

[1] from 60 bar: measurement starts with ambient pressure
[2] absolute pressure possible from 0.4 bar
[3] with IS version max. 1 contact is possible
[4] with connector ISO 4400 and output 2-wire version only max. 1 contact possible; with 3-wire version no contact possible
[5] 4 contacts and M12x1, 8-pin only possible in combination and together with 4 ... 20 mA/3-wire; 0 ... 10 V/3-wire on request
[6] not possible for nominal pressure p_N > 40 bar; for G3/4" flush nominal pressure abs. on request
[7] welded version only with pressure ports according to EN 837 and NPT; possible for nominal pressure ranges p_N ≤ 40 bar

DS 201

Electronic Pressure Switch

Ceramic Sensor

accuracy according to IEC 60770:
0.5 % FSO

Nominal pressure

from 0 ... 400 mbar up to 0 ... 600 bar

Contacts

1, 2 or 4 independent PNP contacts,
freely configurable

Analogue output

2-wire: 4 ... 20 mA
3-wire: 4 … 20 mA / 0 … 10 V
others on request

Special characteristics

- indication of measured values on a 4-digit LED display
- rotatable and configurable display module

Optional versions

- **IS-version**
  Ex ia = intrinsically safe for gases
- pressure port PVDF
- customer specific versions

The electronic pressure switch DS 201 is the successful combination of

- intelligent pressure switch
- digital display

and has been specially designed for universal usage in industry applications. The DS 201 is available with flush pressure ports for viscous, pasty, and highly polluted media.

As standard the DS 201 offers a PNP contact and a rotable display module with 4-digit LED display. Optional versions like e.g. an intrinsically safe version, max. four contacts and an analogue output complete the profile.

Preferred areas of use are

- Plant and machine engineering
- Environmental engineering (water – sewage – recycling)

Input pressure range [1]																		
Nominal pressure gauge [bar]	-1…0	0.4	0.6	1	1.6	2.5	4	6	10	16	25	40	60	100	160	250	400	600
Nominal pressure abs. [bar]	-	-	0.6	1	1.6	2.5	4	6	10	16	25	40	60	100	160	250	400	600
Level gauge [mH_2O]	-	4	6	10	16	25	40	60	100	160	250	400	600	-	-	-	-	-
Overpressure [bar]	4	1	2	2	4	4	10	10	20	40	40	100	100	200	400	400	600	800
Burst pressure ≥ [bar]	7	2	4	4	5	5	12	12	25	50	50	120	120	250	500	500	650	880
Vacuum resistance	p_N ≥ 1 bar: unlimited vacuum resistance p_N < 1 bar: on request																	

[1] PVDF pressure port possible for nominal pressure ranges up to 60 bar

Contact [2]	
Standard	1 PNP contact
Options	2 independent PNP contacts 4 independent PNP contacts (possible with M12x1, 8-pin for 4 ... 20 mA/3-wire; 0 ... 10 V/3-wire on request)
Max. switching current	4 ... 20 mA / 2- and 3-wire: contact rating 125 mA, short-circuit resistant; $V_{Switch} = V_S$ - 2V 0 ... 10 V / 3-wire: contact rating 125 mA, short-circuit resistant
Accuracy of contacts [3]	≤ ± 0.5 % FSO
Repeatability	≤ ± 0.2 % FSO
Switching frequency	max. 10 Hz
Switching cycles	> 100 x 10^6
Delay time	0 ... 100 sec

[2] max. 1 contact for 2-wire current signal with plug ISO 4400 as well as 2-wire current signal with IS-protection
no contact possible with 3-wire in combination with plug ISO 4400

Analogue output (optionally) / Supply	
2-wire current signal	4 ... 20 mA / V_S = 13 ... 36 V_{DC} permissible load: $R_{max} = [(V_S - V_{S\,min}) / 0.02\ A]\ \Omega$ response time: < 10 msec
2-wire current signal with IS-protection	4 ... 20 mA / V_S = 15 ... 28 V_{DC} permissible load: $R_{max} = [(V_S - V_{S\,min}) / 0.02\ A]\ \Omega$ response time: < 10 msec
3-wire current signal	4 ... 20 mA / V_S = 19 ... 30 V_{DC} adjustable (turn-down of span 1:5) [4] permissible load: R_{max} = 500 Ω response time: < 0.5 sec
3-wire voltage signal	0 … 10 V / V_S = 15 ... 36 V_{DC} permissible load: R_{min} = 10 kΩ response time: < 3 msec
Without analogue output	V_S = 15 ... 36 V_{DC}
Accuracy [3]	≤ ± 0.5 % FSO

[3] accuracy according to IEC 60770 – limit point adjustment (non-linearity, hysteresis, repeatability)
[4] with turn-down of span the analogue signal is adjusted automatically to the new measuring range

Thermal effects (offset and span)	
Thermal error	≤ ± 0.2 % FSO / 10 K
In compensated range	0 ... 85 °C
Permissible temperatures	
Medium [5]	-40 ... 125 °C
Electronics / environment	-40 ... 85 °C
Storage	-40 ... 100 °C

[5] for pressure port in PVDF the medium temperature is -30 … 60 °C

Electrical protection	
Short-circuit protection	permanent
Reverse polarity protection	no damage, but also no function
Electromagnetic compatibility	emission and immunity according to EN 61326
Mechanical stability	
Vibration	10 g RMS (25 ... 2000 Hz) according to DIN EN 60068-2-6
Shock	500 g / 1 msec according to DIN EN 60068-2-27

Materials			
Pressure port / housing		pressure port	housing
	standard:	stainless steel 1.4404	stainless steel 1.4404
	option for G1/2" open port (up to 60 bar):	PVDF	stainless steel 1.4404
	option for G3/4" flush (0.6 bar ≤ p_N ≤ 25 bar):	PVDF	PVDF
Display housing	PA 6.6, polycarbonate		
Seals (media wetted)	standard: FKM option: EPDM (p_N ≤ 160 bar) others on request		
Diaphragm	ceramics Al_2O_3 96 %		
Media wetted parts	pressure port, seals, diaphragm		

Explosion protection (only for 4 … 20 mA / 2-wire)	
Approval AX14-DS 201	IBExU 06 ATEX 1050 X zone 1: II 2G Ex ia IIC T4 Gb
Safety tech. maximum values	U_i = 28 V, I_i = 93 mA, P_i = 660 mW, C ≈ 0 nF, L_i ≈ 0 µH
Max. switching current [6]	70 mA
Permissible temperatures for environment	-25 ... 70 °C
Connecting cables (by factory)	cable capacitance: signal line/shield also signal line/signal line: 100 pF/m cable inductance: signal line/shield also signal line/signal line: 1 µH/m
[6] the real switching current in the application depends on the power supply unit	
Miscellaneous	
Display	4-digit, red 7-segment-LED display digit height 7 mm range of indication -1999 ... +9999 accuracy 0.1 % ± 1 digit digital damping 0.3 … 30 sec (programmable); measured value update 0.0 … 10 sec (programmable)
Option oxygen application [7]	for p_N ≤ 25 bar: O-ring in FKM Vi 567 (with BAM-approval); permissible maximum values are 25 bar / 150° C
Current consumption (without contacts)	2-wire signal output current: max. 25 mA 3-wire signal output current: approx. 45 mA + signal current 3-wire signal output voltage: approx. 45 mA
Ingress protection	IP 65
Installation position	any
Weight	approx. 200 g
Operational life	100 million load cycles
CE-conformity	EMC Directive: 2014/30/EU Pressure Equipment Directive: 2014/68/EU (module A) [8]
ATEX Directive	2014/34/EU
[7] not possible with flush pressure ports *[8] this directive is only valid for devices with maximum permissible overpressure > 200 bar*	

Wiring diagrams

2-wire-system (current)

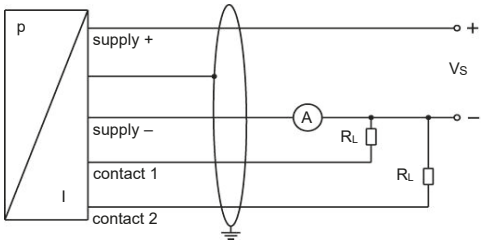

3-wire-system (current/voltage)

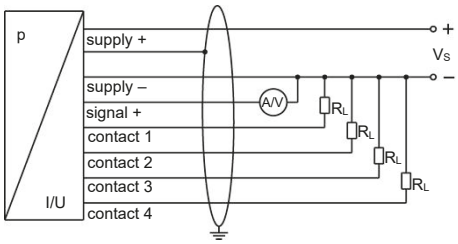

Pin configuration

Electrical connection	M12x1 plastic (5-pin)	M12x1 metal (5-pin)	M12x1 plastic (8-pin)	ISO 4400	Binder series 723 (5-pin)
Supply +	1	1	1	1	1
Supply –	3	3	3	2	3
Signal + (only 3-wire)	2	2	2	3	2
Contact 1	4	4	4	3	4
Contact 2	5	5	5	-	5
Contact 3	-	-	6	-	-
Contact 4	-	-	7	-	-
Shield	via pressure port	plug housing/ pressure port	via pressure port	ground contact	plug housing/ pressure port

Electrical connections (dimensions mm / in)

M12x1 plastic
(5-pin)

M12x1 metal
(5-pin)

M12x1 plastic
(8-pin)

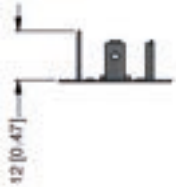

ISO 4400

Binder series 723
(5-pin)

Dimensions (mm / in)

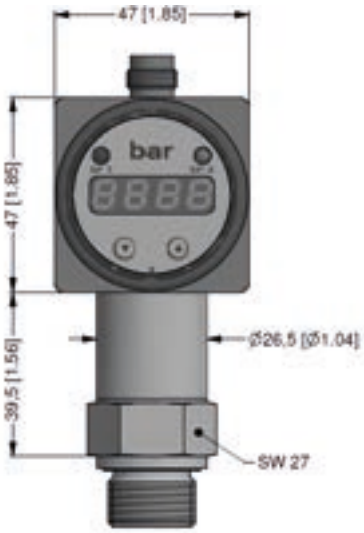

rotatability of display module

Mechanical connection (dimensions mm / in)

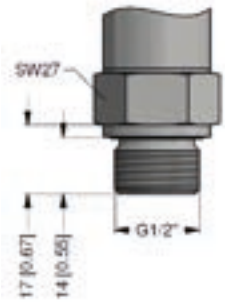

G1/2" DIN 3852

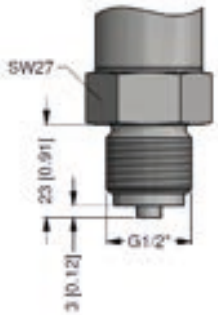

G1/2" EN 837

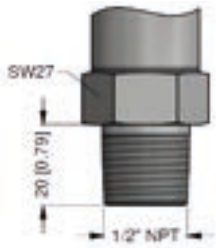

1/2" NPT

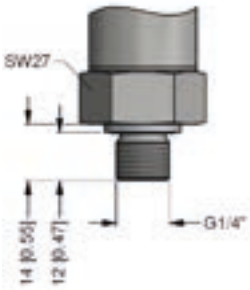

G1/4" DIN 3852

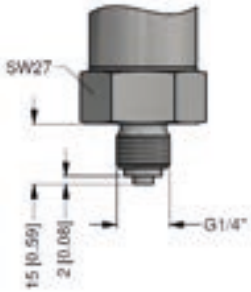

G1/4" EN 837

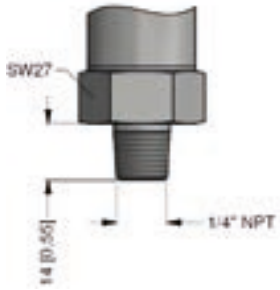

1/4" NPT

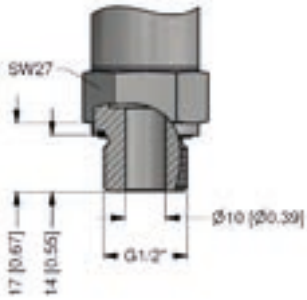

G1/2" open port
DIN 3852

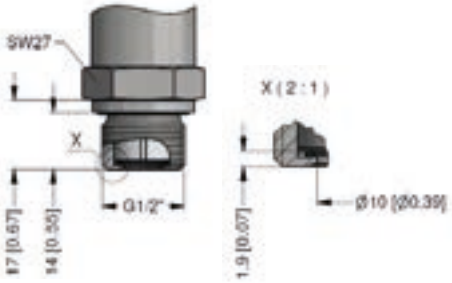

G1/2" semi-flush DIN 3852
(0.6 bar ≤ p_N ≤ 60 bar gauge)

length of device: 97.5 mm (without plug)

G3/4" semi-flush DIN 3852
(0.6 bar ≤ p_N ≤ 60 bar gauge)

length of device: 87.5 mm (without plug)

⇨ **metric threads and other versions on request**

Ordering code DS 201

DS 201 ☐☐☐-☐☐☐☐-☐-☐-☐-☐☐☐-☐☐☐-☐-☐-☐-☐☐☐

Pressure	Code	
gauge in bar	7 8 2	
gauge in mH$_2$O	7 8 E	
absolute in bar	7 8 3	

Input [mH$_2$O]	[bar]	Code	
4	0.4	4 0 0 0	
6	0.6	6 0 0 0	
10	1.0	1 0 0 1	
16	1.6	1 6 0 1	
25	2.5	2 5 0 1	
40	4.0	4 0 0 1	
60	6.0	6 0 0 1	
100	10	1 0 0 2	
160	16	1 6 0 2	
250	25	2 5 0 2	
400	40	4 0 0 2	
600	60	6 0 0 2	
	100	1 0 0 3	
	160	1 6 0 3	
	250	2 5 0 3	
	400	4 0 0 3	
	600	6 0 0 3	
	-1 … 0	X 1 0 2	
	customer	9 9 9 9	consult

Analogue output	Code	
without	0	
4 … 20 mA / 2-wire	1	
0 … 10 V / 3-wire	3	
4 … 20 mA / 3-wire, adjustable	7	
intrinsic safety 4 … 20 mA / 2-wire [1]	E	
customer	9	consult

Contact	Code	
1 contact [1,2]	1	
2 contacts [1,2]	2	
4 contacts [3]	4	consult

Accuracy	Code	
0.5 % FSO	5	
customer	9	consult

Electrical connection	Code	
male plug M12x1 (5-pin) / plastic version	N 0 1	
male plug M12x1 (8-pin) / plastic version [3]	M 5 0	
male plug M12x1 (5-pin) / metal version	N 1 1	
male and female plug ISO 4400 [2]	1 0 0	
male plug Binder series 723 (5-pin)	2 0 4	
customer	9 9 9	consult

Mechanical connection	Code	
G1/2" DIN 3852	1 0 0	
G1/2" EN 837	2 0 0	
G1/4" DIN 3852	3 0 0	
G1/4" EN 837	4 0 0	
G1/2" DIN 3852 with semi-flush sensor [4]	F 0 0	
G3/4" DIN 3852 with semi-flush sensor [5]	K 0 0	
G1/2" DIN 3852 open pressure port	H 0 0	
1/2" NPT	N 0 0	
1/4" NPT	N 4 0	
customer	9 9 9	consult

Seal	Code	
FKM	1	
EPDM [6]	3	
customer	9	consult

Pressure port	Code	
stainless steel 1.4404 (316L)	1	
PVDF [7]	B	
customer	9	consult

Diaphragm	Code	
ceramics Al$_2$O$_3$ 96%	2	
customer	9	consult

Special version	Code	
standard	0 0 0	
oxygen application [8]	0 0 7	
customer	9 9 9	consult

[1] with IS version max.1 contact possible
[2] with connector ISO 4400 and output 2-wire version only max. 1 contact possible; with 3-wire version no contact possible
[3] 4 contacts and M12x1, 8-pin only possible in combination and together with 4 ... 20 mA/3-wire; 0 ... 10 V/3-wire on request
[4] possible for nominal pressure ranges $p_N \geq 0.6$ bar up to $p_N \leq 60$ bar gauge, absolute on request
[5] possible for nominal pressure ranges $p_N \geq 0.6$ bar up to $p_N \leq 60$ bar gauge
[6] possible for nominal pressure ranges $p_N \leq 160$ bar
[7] PVDF only with G1/2" DIN 3852 open pressure port (up to 60 bar) and G3/4" DIN 3852 with flush sensor (0.6 bar $\leq p_N \leq$ 25 bar); permissible medium temperature: -30 … 60 °C
[8] oxygen application with FKM-seal up to 25 bar possible, flush version on request

DS 202

Electronic Pressure Switch

Welded, Dry Stainless Steel Sensor

accuracy according to IEC 60770:
0.5 % FSO

Nominal pressure

from 0 ... 16 bar up to 0 ... 600 bar

Contacts

1, 2 or 4 independent PNP contacts,
freely configurable

Analogue output

2-wire: 4 ... 20 mA
3-wire: 4 … 20 mA / 0 … 10 V
others on request

Special characteristics

- indication of measured values on a 4-digit LED display
- rotatable and configurable display module

Optional versions

- **IS-version**
  Ex ia = intrinsically safe for gases
- oxygen application
- customer specific versions

The electronic pressure switch DS 202 is the successful combination of

- robust pressure transmitter
- digital display

and has been specially designed for numerous applications in various industrial sectors.

As standard the DS 202 offers a PNP contact and a rotable display module with 4-digit LED display. The transmitters are suitable for an unrestricted use in oxygen applications up to 600 bar and an intrinsically safe IS-Version.

Preferred areas of use are

- Medical technology
- Plant and machine engineering
- Refrigeration
- Oxygen application

Input pressure range										
Nominal pressure gauge	[bar]	16	25	40	60	100	160	250	400	600
Overpressure	[bar]	32	50	80	120	200	320	500	800	1200
Burst pressure ≥	[bar]	80	125	200	300	500	800	1400	2000	3000
Vacuum resistance		unlimited								

Contact [1]	
Number, type	standard: 1 PNP contact option: 2 independent PNP contacts 4 independent PNP contacts (possible with M12x1 8-pin for 4 … 20 mA / 3-wire)
Max. switching current	4 ... 20 mA / 2- and 3-wire: contact rating 125 mA, short-circuit resistant; $V_{switch} = V_S - 2V$ 0 ... 10 V / 3-wire: contact rating 125 mA, short-circuit resistant
Accuracy of contacts [2]	≤ ± 0.5 % FSO
Repeatability	≤ ± 0.1 % FSO
Switching frequency	max. 10 Hz
Switching cycles	> 100 x 10^6
Delay time	0 ... 100 sec
[1] with IS-protection max. 1 contact possible	
Analogue output (optionally) / Supply	
2-wire current signal	4 ... 20 mA / V_S = 13 ... 36 V_{DC} permissible load: $R_{max} = [(V_S - V_{S\,min}) / 0.02\ A]\ \Omega$ response time: < 10 msec
2-wire current signal with IS-protection	4 ... 20 mA / V_S = 15 ... 28 V_{DC} permissible load: $R_{max} = [(V_S - V_{S\,min}) / 0.02\ A]\ \Omega$ response time: < 10 msec
3-wire current signal	4 ... 20 mA / V_S = 19 ... 30 V_{DC} adjustable (turn-down of span up to 1:5) [3] permissible load: R_{max} = 500 Ω response time: < 0.5 sec
3-wire voltage signal	0 … 10 V / V_S = 15 ... 36 V_{DC} permissible load: R_{min} = 10 kΩ response time: < 3 msec
Without analogue output	V_S = 15 ... 36 V_{DC}
Accuracy [2]	≤ ± 0.5 % FSO
[2] accuracy according to IEC 60770 – limit point adjustment (non-linearity, hysteresis, repeatability) *[3] with turn-down of span the analogue signal is adjusted automatically to the new measuring range*	
Thermal effects (offset and span)	
Thermal error	± 0.3 % FSO / 10 K
in compensated range	0 … 70 °C
Permissible temperatures	
Medium	-40 ... 125 °C
Electronics / environment	-40 ... 85 °C
Storage	-40 ... 100 °C
Electrical protection	
Short-circuit protection	permanent
Reverse polarity protection	no damage, but also no function
Electromagnetic compatibility	emission and immunity according to EN 61326
Mechanical stability	
Vibration	10 g RMS (25 ... 2000 Hz) according to DIN EN 60068-2-6
Shock	500 g / 1 msec according to DIN EN 60068-2-27
Materials	
Pressure port	stainless steel 1.4571 (316 Ti)
Housing	stainless steel 1.4404 (316 L)
Display housing	PA 6.6, polycarbonate
Seals (media wetted)	none (welded)
Diaphragm	stainless steel 1.4542 (17-4PH)
Media wetted parts	pressure port, diaphragm
Explosion protection (only for 4 … 20 mA / 2-wire)	
Approval AX14-DS 202	IBExU 06 ATEX 1050 X zone 1: II 2G Ex ia IIC T4 Gb
Safety technical maximum values	U_i = 28 V, I_i = 93 mA, P_i = 660 mW, C ≈ 0 nF, L_i ≈ 0 µH
Max. switching current [4]	70 mA
Permissible temperatures for environment	-25 ... 70 °C
Connecting cables (by factory)	cable capacitance: signal line/shield also signal line/signal line: 100 pF/m cable inductance: signal line/shield also signal line/signal line: 1 µH/m
[4] the real switching current in the application depends on the power supply unit	

Miscellaneous	
Display	4-digit, red 7-segment-LED display, digit height 7 mm, digit width 4.85 mm (angle 10°); range of indication -1999 ... +9999; accuracy 0.1 % ± 1 digit; digital damping 0.3 … 30 sec (programmable); measured value update 0.0 … 10 sec (programmable)
Current consumption (without contacts)	2-wire signal output current: max. 25 mA 3-wire signal output current: approx. 45 mA + signal current 3-wire signal output voltage: approx. 45 mA
Ingress protection	IP 65
Installation position	any
Weight	min. 160 g (depending on mechanical connection)
Operational life	100 million load cycles
CE-conformity	EMC Directive: 2014/30/EU Pressure Equipment Directive: 2014/68/EU (module A) [5]
ATEX Directive	2014/34/EU

[5] This directive is only valid for devices with maximum permissible overpressure > 200 bar

Wiring diagrams

2-wire-system (current)

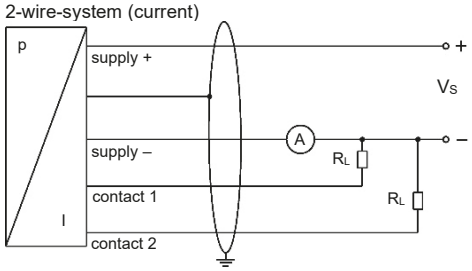

3-wire-system (current / voltage)

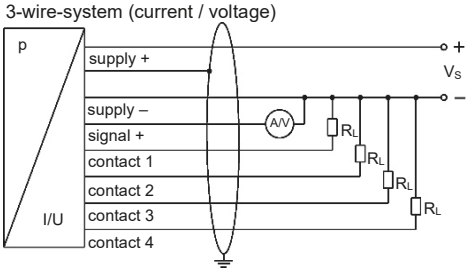

Pin configuration

Electrical connection	M12x1 plastic (5-pin)	M12x1 metal (5-pin)	M12x1 plastic (8-pin)	ISO 4400	Binder series 723 (5-pin)
Supply +	1	1	1	1	1
Supply –	3	3	3	2	3
Signal + (only 3-wire)	2	2	2	3	2
Contact 1	4	4	4	3	4
Contact 2	5	5	5	-	5
Contact 3	-	-	6	-	-
Contact 4	-	-	7	-	-
Shield	via pressure port	plug housing/ pressure port	via pressure port	ground contact	plug housing/ pressure port

DS 202

Technical Data

Electrical connections (dimensions mm / in)

M12x1 plastic
(5-pin)

M12x1 metal
(5-pin)

M12x1 plastic
(8-pin)

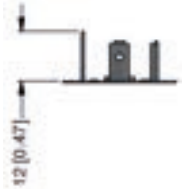

ISO 4400

Binder series 723
(5-pin)

Dimensions (mm / in)

top view

rotatability of display module

Mechanical connection (dimensions mm / in)

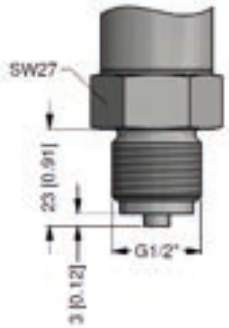

G1/2" EN 837

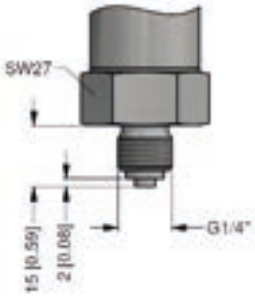

G1/4" EN 837

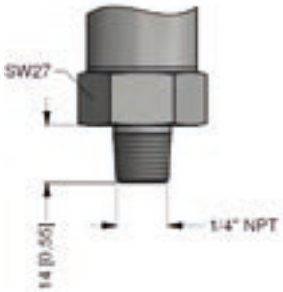

1/4" NPT

⇨ **metric threads and other versions on request**

Ordering code DS 202

DS 202 □□□-□□□□-□-□-□-□□□-□□□-□-□□□

Pressure																							
gauge in bar [1]	7	8	4																				
Input	**[bar]**																						
16				1	6	0	2																
25				2	5	0	2																
40				4	0	0	2																
60				6	0	0	2																
100				1	0	0	3																
160				1	6	0	3																
250				2	5	0	3																
400				4	0	0	3																
600				6	0	0	3																
customer				9	9	9	9																consult
Analogue output																							
without								0															
4 … 20 mA / 2-wire								1															
0 … 10 V / 3-wire								3															
4 … 20 mA / 3-wire								7															
intrinsic safety 4 … 20 mA / 2-wire [2]								E															
customer								9															consult
Contact																							
1 contact [2]									1														
2 contacts									2														
4 contacts									4														consult
Accuracy																							
0.5 % FSO										5													
customer										9													consult
Electrical connection																							
male plug M12x1 (5-pin) / plastic version											N	0	1										
male plug M12x1 (8-pin) / plastic version [3]											M	5	0										
male plug M12x1 (5-pin) / metal version											N	1	1										
male and female plug ISO 4400 [4]											1	0	0										
male plug Binder series 723 (5-pin)											2	0	4										
customer											9	9	9										consult
Mechanical connection														2	0	0							
G1/2" EN 837														4	0	0							
G1/4" EN 837														N	4	0							
1/4" NPT														9	9	9							
customer																							consult
Seal																	2						
without (welded version)																	9						
customer																							consult
Special version																			0	0	0		
standard																			0	0	7		
oxygen application																			9	9	9		
customer																							consult

[1] from 60 bar: measurement starts with ambient pressure
[2] with IS version max. 1 contact is possible
[3] 4 contacts and M12x1, 8-pin only possible in combination and together with 4 ... 20 mA/3-wire; 0 ... 10 V/3-wire on request
[4] with connector ISO 4400 and output 2-wire version only max. 1 contact possible; with 3-wire version no contact possible

DS 210

Electronic Pressure Switch

Without Media Isolation

accuracy according to IEC 60770:
0.35 % FSO

Nominal pressure

from 0 ... 10 mbar up to 0 ... 1000 mbar

Contacts

1, 2 or 4 independent contacts
freely configurable

Analogue output

2-wire: 4 ... 20 mA
3-wire: 4 … 20 mA / 0 … 10 V
others on request

Special characteristics

- indication of measured values on a 4-digit LED display
- rotatable and configurable display module

Optional versions

- **IS-version**
  Ex ia = intrinsically safe for gases
- customer specific versions

The electronic pressure switch DS 210 is the successful combination of

- intelligent pressure switch
- digital display

and has been specially designed for measuring of very small overpressure and for vacuum applications. Permissible media are gases, pressurized air and thin non aggressive media.

As standard the DS 210 offers a PNP-contact and a rotable display module. Additional features like e.g. an intrinsically safe version, max. four contacts and an analogue output complete the profile.

Preferred areas of use are

- Plant and machine engineering
- Heating and air conditioning
- Laboratory techniques

Input pressure range													
Nominal pressure gauge	[mbar]	-1000 ... 0	10	16	25	40	60	100	160	250	400	600	1000
Overpressure	[bar]	3	0.2	0.2	0.5	0.5	0.5	1	2	3	3	3	3
Burst pressure	[bar]	5	0.3	0.3	0.75	0.75	0.75	1.5	3	5	5	5	5

Contact [1]	
Standard	1 PNP contact
Options	2 independent PNP contacts 4 independent PNP contacts (possible with M12x1, 8-pin for 4 ... 20 mA/3-wire; 0 ... 10 V/3-wire on request)
Max. switching current	4 ... 20 mA / 2- and 3-wire: contact rating 125 mA, short-circuit resistant; $V_{switch} = V_S - 2V$ 0 ... 10 V / 3-wire: contact rating 125 mA, short-circuit resistant
Accuracy of contacts [2]	standard: ≤ ± 0.35 % FSO nominal pressure ≤ 100 mbar: ≤ ± 0.5 % FSO
Repeatability	≤ ± 0.1 % FSO
Switching frequency	max. 10 Hz
Switching cycles	> 100 x 10^6
Delay time	0 ... 100 sec

[1] max. 1 contact for 2-wire current signal with plug ISO 4400 as well as 2-wire current signal with Ex-protection
no contact possible with 3-wire in combination with plug ISO 4400

Analogue output (optionally) / Supply	
2-wire current signal	4 ... 20 mA / V_S = 13 ... 36 V_{DC} permissible load: $R_{max} = [(V_S - V_{S\,min}) / 0{,}02\ A]\ \Omega$ response time: < 10 msec
2-wire current signal with Ex-protection	4 ... 20 mA / V_S = 15 ... 28 V_{DC} permissible load: $R_{max} = [(V_S - V_{S\,min}) / 0{,}02\ A]\ \Omega$ response time: < 10 msec
3-wire current signal	4 ... 20 mA / V_S = 19 ... 30 V_{DC} adjustable (turn-down of span max. 1:5) [3] permissible load: R_{max} = 500 Ω response time: < 3 sec
3-wire voltage signal	0 ... 10 V / V_S = 15 ... 36 V_{DC} permissible load: R_{min} = 10 k Ω response time: < 3 msec
Without analogue output	V_S = 15 ... 36 V_{DC}
Accuracy [2]	standard: ≤ ± 0.35 % FSO nominal pressure ≤ 100 mbar: ≤ ± 0.5 % FSO

[2] accuracy according to IEC 60770 – limit point adjustment (non-linearity, hysteresis, repeatability)
[3] with turn-down of span the analogue signal is adjusted automatically to the new measuring range

Thermal effects (offset and span)				
Nominal pressure p_N [mbar]	-1000 ... 0	≤ 100	≤ 400	> 400
Tolerance band [% FSO]	≤ ± 0.75	≤ ± 1.5	≤ ± 1	≤ ± 0.75
in compensated range [°C]	-20 ... 85	0 ... 50	0 … 70	-20 ... 85

Permissible temperatures	
Medium	-40 ... 125 °C
Electronics / environment	-40 ... 85 °C
Storage	-40 ... 100 °C

Electrical protection	
Short-circuit protection	permanent
Reverse polarity protection	no damage, but also no function
Electromagnetic compatibility	emission and immunity according to EN 61326

Mechanical stability		
Vibration	10 g RMS (25 ... 2000 Hz)	according to DIN EN 60068-2-6
Shock	500 g / 1 msec	according to DIN EN 60068-2-27

Materials	
Pressure port	stainless steel 1.4404 (316L)
Housing	stainless steel 1.4404 (316L)
Display housing	PA 6.6, Polycarbonate
Seal (media wetted)	FKM
Sensor	stainless steel 1.4404 (316L), silicon, Epoxy or RTV, glass
Media wetted parts	pressure port, seal, sensor

Explosion protection (for 2-wire current signal)	
Approval AX14-DS 210	IBExU 06 ATEX 1050 X zone 1: II 2G Ex ia IIC T4 Gb (connector) / II 2G Ex ia IIB T4 Gb (cable)
Safety technical maximum values	U_i = 28 V, I_i = 93 mA, P_i = 660 mW, C ≈ 0 nF, L_i ≈ 0 µH
Max. switching current [4]	70 mA
Permissible temperatures for environment	-25 ... 70 °C
Connecting cables (by factory)	cable capacitance: signal line/shield also signal line/signal line: 100 pF/m cable inductance: signal line/shield also signal line/signal line: 1 µH/m

[4] the real switching current in the application depends on the power supply unit

Miscellaneous	
Display	4-digit, red 7-segment-LED display, digit height 7 mm, range of indication -1999 ... +9999; accuracy 0.1 % ± 1 digit; digital damping 0.3 … 30 sec (programmable); measured value update 0.0 … 10 sec (programmable)
Current consumption (without contacts)	2-wire signal output current: max. 25 mA 3-wire signal output current: approx. 45 mA + signal current 3-wire signal output voltage: approx. 45 mA
Ingress protection	IP 65
Installation position	any
Weight	approx. 180 g
Operational life	100 million load cycles
CE-conformity	EMC Directive: 2014/30/EU
ATEX Directive	2014/34/EU

Wiring diagrams

2-wire-system (current)

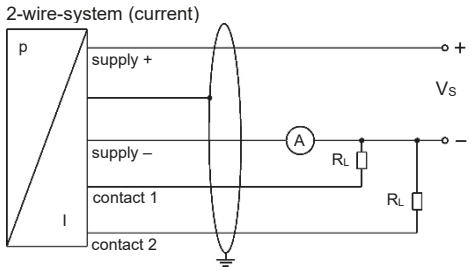

3-wire-system (current / voltage)

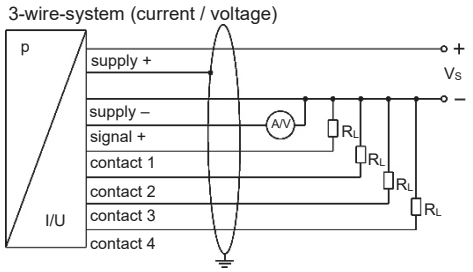

Pin configuration

Electrical connection	M12x1 plastic (5-pin)	M12x1 metal (5-pin)	M12x1 plastic (8-pin)	ISO 4400	Binder series 723 (5-pin)
Supply +	1	1	1	1	1
Supply –	3	3	3	2	3
Signal + (only 3-wire)	2	2	2	3	2
Contact 1	4	4	4	3	4
Contact 2	5	5	5	-	5
Contact 3	-	-	6	-	-
Contact 4	-	-	7	-	-
Shield	via pressure port	plug housing/ pressure port	via pressure port	ground contact	plug housing/ pressure port

Electrical connections (dimensions mm / in)

M12x1 plastic
(5-pin)

M12x1 metal
(5-pin)

M12x1 plastic
(8-pin)

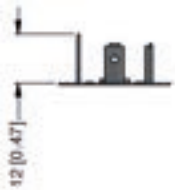

ISO 4400

Binder series 723
(5-pin)

Dimensions (mm / in)

top view

rotatability of display module

Mechanical connection (dimensions mm / in)

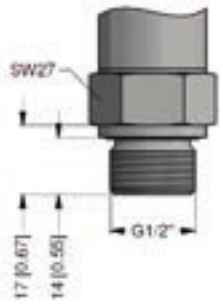

G1/2" DIN 3852

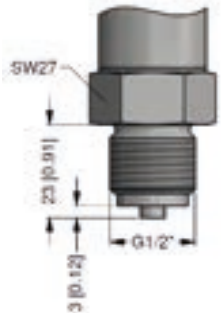

G1/2" EN 837

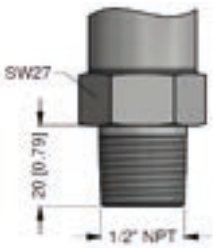

1/2" NPT

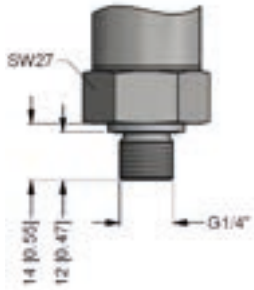

G1/4" DIN 3852

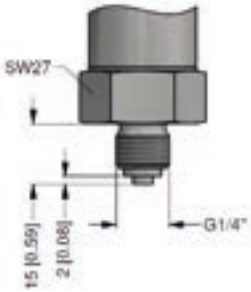

G1/4" EN 837

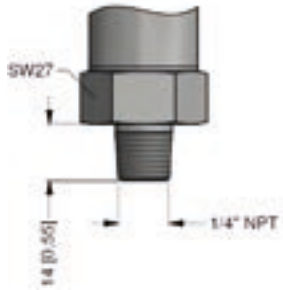

1/4" NPT

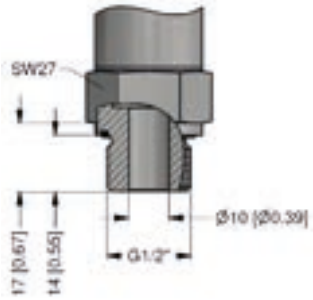

G1/2" open port

⇨ **metric threads and other versions on request**

Ordering code DS 210

DS 210 ☐☐☐-☐☐☐☐-☐-☐-☐-☐☐☐-☐☐☐-☐-☐☐☐

Pressure		
gauge	7 8 A	
Input [mbar]		
10	0 1 0 0	
16	0 1 6 0	
25	0 2 5 0	
40	0 4 0 0	
60	0 6 0 0	
100	1 0 0 0	
160	1 6 0 0	
250	2 5 0 0	
400	4 0 0 0	
600	6 0 0 0	
1000	1 0 0 1	
-1000 … 0	X 1 0 2	
customer	9 9 9 9	consult
Analogue output		
without	0	
4 … 20 mA / 2-wire	1	
0 … 10 V / 3-wire	3	
4 … 20 mA / 3-wire, adjustable	7	
intrinsic safety 4 … 20 mA / 2-wire [1]	E	
customer	9	consult
Contact		
1 contact [1, 2]	1	
2 contacts [1, 2]	2	
4 contacts [3]	4	consult
Accuracy		
standard for $p_N > 0.1$ bar: 0.35 % FSO	3	
standard for $p_N \leq 0.1$ bar: 0.5 % FSO	5	
customer	9	consult
Electrical connection		
male plug M12x1 (5-pin) / plastic version	N 0 1	
male plug M12x1 (8-pin) / plastic version [3]	M 5 0	
male plug M12x1 (5-pin) / metal version	N 1 1	
male and female plug ISO 4400 [2]	1 0 0	
male plug Binder series 723 (5-pin)	2 0 4	
customer	9 9 9	consult
Mechanical connection		
G1/2" DIN 3852	1 0 0	
G1/2" EN 837	2 0 0	
G1/4" DIN 3852	3 0 0	
G1/4" EN 837	4 0 0	
G1/2" DIN 3852 open pressure port	H 0 0	
1/2" NPT	N 0 0	
1/4" NPT	N 4 0	
customer	9 9 9	consult
Seal		
FKM	1	
customer	9	consult
Special version		
standard	0 0 0	
customer	9 9 9	consult

[1] with IS version max. 1 contact is possible
[2] with connector ISO 4400 and output 2-wire version only max. 1 contact possible; with 3-wire version no contact possible
[3] 4 contacts and M12x1, 8-pin only possible in combination and together with 4 ... 20 mA/3-wire; 0 ... 10 V/3-wire on request

DS 214

Electronic Pressure Switch for Very High Pressure

Thinfilm Sensor

accuracy according to IEC 60770:
standard: 0.35 % FSO

The electronic pressure switch DS 214 for very high pressure up to 2 200 bar has been designed especially for use in plant and machine engineering as well as in mobile hydraulics.

The DS 214 has one 1 contact with standard version, this can optionally be upgraded up to four independent contacts.

Via the rotatable module with an integrated 4-digit display the DS 214 can be programmed easily and comfortably.

Nominal pressure

from 0 ... 600 bar up to 0 ... 2 200 bar

Contacts

1, 2 or 4 independent PNP contacts,
freely configurable

Analogue output

2-wire: 4 ... 20 mA
3-wire: 4 … 20 mA / 0 … 10 V
others on request

Special characteristics

- indication of measured values on a 4-digit LED display
- pressure sensor welded
- extremely robust and excellent long-term stability

Optional versions

- adjustability of span and offset (4 ... 20 mA / 3-wire)
- customer specific versions

Preferred areas of use are

- Plant and machine engineering
- Commercial vehicles and mobile hydraulics

Input pressure range						
Nominal pressure gauge	[bar]	600	1000	1600	2000	2200
Overpressure	[bar]	2000	2000	2800	2800	2800

Contact [1]	
Standard	1 PNP contact
Options	2 independent PNP contacts 4 independent PNP contacts (possible with M12x1, 8-pin for 4 ... 20 mA/3-wire)
Max. switching current	4 ... 20 mA / 2- and 3-wire: contact rating 125 mA, short-circuit resistant; $V_{switch} = V_S - 2$ V 0 ... 10 V / 3-wire: contact rating 125 mA, short-circuit resistant
Accuracy of contacts [2]	≤ ± 0.35 % FSO
Repeatability	≤ ± 0.1 % FSO
Switching frequency	max. 10 Hz
Switching cycles	> 100 x 10^6
Delay time	0 ... 100 sec
[1] max. 1 contact for 2-wire current signal with plug ISO 4400 *no contact possible with 3-wire in combination with plug ISO 4400*	
Analogue output (optionally) / Supply	
2-wire current signal	4 ... 20 mA / V_S = 13 ... 36 V_{DC} permissible load: $R_{max} = [(V_S - V_{S\,min}) / 0.02\ A]\ \Omega$ response time: < 10 msec
3-wire current signal	4 ... 20 mA / V_S = 19 ... 30 V_{DC} adjustable (turn-down of span 1:5) [3] permissible load: R_{max} = 500 Ω response time: < 3 sec
3-wire voltage signal	0 … 10 V / V_S = 15 ... 36 V_{DC} permissible load: R_{min} = 10 kΩ response time: < 3 msec
Without analogue output	V_S = 15 ... 36 V_{DC}
Accuracy [2]	≤ ± 0.35 %FSO IEC 60770
[2] accuracy according to IEC 60770 – limit point adjustment (non-linearity, hysteresis, repeatability) *[3] with turn-down of span the analogue signal is adjusted automatically to the new measuring range*	
Thermal effects (offset and span)	
Thermal error	≤ ± 0.25 % FSO / 10 K
In compensated range	-20 ... 85 °C
Permissible temperatures	
Medium	-40 ... 140 °C
Electronics / environment	-25 ... 85 °C
Storage	-40 ... 100 °C
Electrical protection	
Short-circuit protection	permanent
Reverse polarity protection	no damage, but also no function
Electromagnetic compatibility	emission and immunity according to EN 61326
Mechanical stability	
Vibration	10 g RMS (25 ... 2000 Hz)
Shock	100 g / 11 msec
Materials	
Pressure port	stainless steel 1.4542 (17-4 PH)
Housing	stainless steel 1.4404 (316 L)
Display housing	PA 6.6, polycarbonate
Seals (media wetted)	none (welded version)
Diaphragm	stainless steel 1.4542 (17-4 PH)
Media wetted parts	pressure port, diaphragm
Miscellaneous	
Display	4-digit, red 7-segment-LED display, digit height 7 mm, range of indication -1999 ... +9999; accuracy 0.1 % ± 1 digit; digital damping 0.3 … 30 sec (programmable); measured value update 0.0 … 10 sec (programmable)
Current consumption (without contacts)	2-wire signal output current: max. 25 mA 3-wire signal output current: approx. 45 mA 3-wire signal output voltage: approx. 7 mA + signal current
Ingress protection	IP 65
Installation position	any
Weight	min. 200 g (depending on mechanical connection)
Operational life	p_N = 600 bar: 100 million load cycles p_N > 600 bar: 10 million load cycles
CE-conformity	EMC Directive: 2014/30/EU Pressure Equipment Directive: 2014/68/EU (module A)

Wiring diagrams

2-wire-system (current)

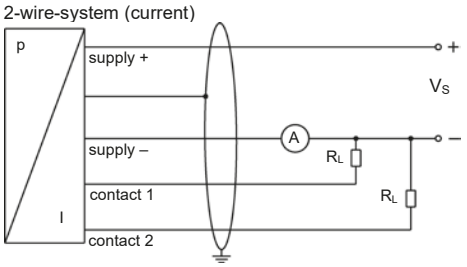

3-wire-system (current / voltage)

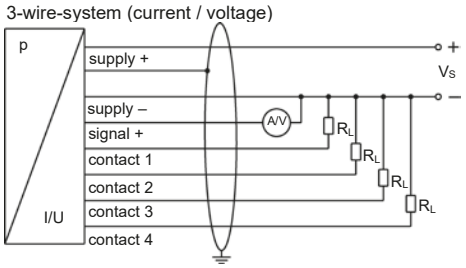

Pin configuration

Electrical connection	M12x1 plastic (5-pin)	M12x1 metal (5-pin)	M12x1 plastic (8-pin)	ISO 4400	Binder series 723 (5-pin)
Supply +	1	1	1	1	1
Supply –	3	3	3	2	3
Signal + (only 3-wire)	2	2	2	3	2
Contact 1	4	4	4	3	4
Contact 2	5	5	5	-	5
Contact 3	-	-	6	-	-
Contact 4	-	-	7	-	-
Shield	via pressure port	plug housing/ pressure port	via pressure port	ground contact	plug housing/ pressure port

Electrical connections (dimensions mm / in)

M12x1 plastic
(5-pin)

M12x1 metal
(5-pin)

M12x1 plastic
(8-pin)

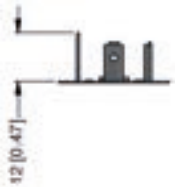

ISO 4400

Binder series 723
(5-pin)

Dimensions (mm / in)

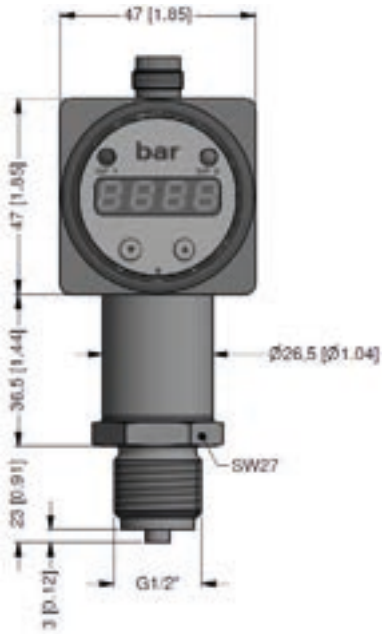

G1/2" EN 837 [4]

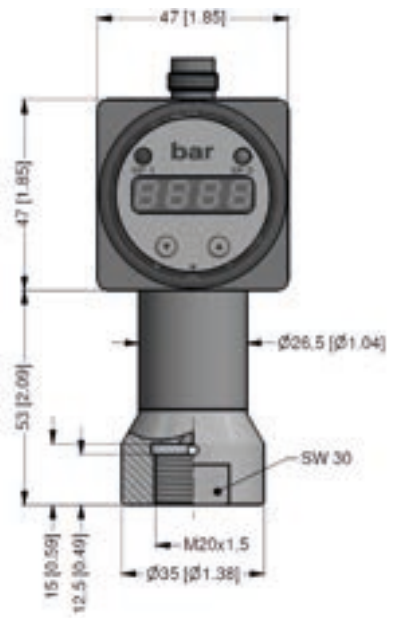

M20x1.5 internal thread

[4] According to EN 837, the pressure port and the complement, at pressure over 1000 bar must be preferably made of stainless steel with a tensile strength of R_P > 260 N/mm² in accordance with DIN 17440. The maximum allowed pressure is 1600 bar!

Rotatability of display module

Ordering code DS 214

DS 214 □□□-□□□□-□-□-□-□□□-□□□-□-□□□

Pressure																						
gauge	7	8	B																			
Input	**[bar]**																					
600				6	0	0	3															
1000				1	0	0	4															
1600				1	6	0	4															
2000				2	0	0	4															
2200				2	2	0	4															
customer				9	9	9	9															consult
Analogue output																						
without								0														
4 … 20 mA / 2-wire								1														
0 … 10 V / 3-wire								3														
4 … 20 mA / 3-wire, adjustable								7														
customer								9														consult
Contact																						
1 contact [1]									1													
2 contacts [1]									2													
4 contacts [2]									4													consult
Accuracy																						
0.35 % FSO										3												
customer										9												consult
Electrical connection																						
male plug M12x1 (5-pin) / plastic version											N	0	1									
male plug M12x1 (8-pin) / plastic version [2]											M	5	0									
male plug M12x1 (5-pin) / metal version											N	1	1									
male and female plug ISO 4400 [1]											1	0	0									
male plug Binder series 723 (5-pin)											2	0	4									
customer											9	9	9									consult
Mechanical connection																						
G1/2" EN 837 [3]														2	0	0						
M20x1.5 internal thread														D	2	8						
customer														9	9	9						consult
Seal																						
without (welded version)																	2					
customer																	9					consult
Special version																						
standard																		0	0	0		
customer																		9	9	9		consult

[1] with connector ISO 4400 and output 2-wire version only max. 1 contact possible; with 3-wire version no contact possible
[2] 4 contacts and M12x1, 8-pin only possible in combination and together with 4 ... 20 mA/3-wire; 0 ... 10 V/3-wire on request
[3] According to EN 837, the pressure port and the complement, at pressure over 1000 bar must be preferably made of stainless steel with a tensile strength of R_P > 260 N/mm² in accordance with DIN 17440. The maximum allowed pressure is 1600 bar!

DS 233

Differential Pressure Switch for Gases and Compressed Air in Compact Version

Silicon Sensor

accuracy according to IEC 60770:
0.35 % FSO

Differential pressure

from 0 ... 6 mbar up to 0 ... 1000 mbar

Output signal

2-wire: 4 ... 20 mA
3-wire: 4 … 20 mA
0 … 10 V

Special characteristics

- aluminium housing
- LED display
- rotatable and configurable display module
- suited for non-aggressive gases and compressed air

Optional versions

- 1 / 2 PNP contacts
- customer specific versions

The DS 233 is a differential pressure switch with digital display for non-aggressive gases and compressed air. Because of its compact and robust aluminium housing it is particularly suited for machine and plant engineering.

Basic element of the DS 233 is a piezoresistive silicon pressure sensor, which features high accuracy and excellent long term stability.

As standard the DS 233 offers a PNP contact and a rotatable display module with 4-digit LED display for representing the differential pressure. Optional up to two freely configurable contacts are available.

Preferred areas of use are

- Plant and machine engineering
- Heating and air conditioning

Input pressure range											
Nominal pressure p_N (over, differential pressure) [mbar]	0...6	0...10	0...20	0...40	0...60	0...100	0...160	0...250	0...400	0...600	0...1000
Nominal pressure p_N symmetric (differential pressure) [mbar]	± 6	± 10	± 20	± 40	± 60	± 100	± 160	± 250	± 400	± 600	± 1000
Overpressure [mbar]	100	100	200	350	350	1000	1000	1000	1000	3000	3000

Contact [1]	
Standard	1 PNP contact
Option	2 independent PNP contacts
Max. switching current	4 ... 20 mA / 2- and 3-wire: contact rating 125 mA, short-circuit resistant; $V_{Switch} = V_S$ - 2V 0 ... 10 V / 3-wire: contact rating 125 mA, short-circuit resistant
Accuracy of contacts [2]	p_N > 160 mbar: ≤ ± 0.35 % FSO 40 mbar ≤ p_N ≤ 160 mbar: ≤ ± 1 % FSO p_N < 40 mbar: ≤ ± 2 % FSO
Repeatability	≤ ± 0.1 % FSO
Switching frequency	max. 10 Hz
Switching cycles	> 100 x 10^6
Delay time	0 ... 100 sec
[1] max. 1 contact for 2-wire current signal with plug ISO 4400, no contact possible with 3-wire in combination with plug ISO 4400	
Analogue output (optionally) / Supply	
2-wire current signal	4 ... 20 mA / V_S = 13 ... 36 V_{DC} permissible load: $R_{max} = [(V_S - V_{S\,min}) / 0.02\ A]\ \Omega$ response time: < 10 msec
3-wire current signal	4 ... 20 mA / V_S = 19 ... 30 V_{DC} adjustable (turn-down of span 1:5) [3] permissible load: R_{max} = 500 Ω response time: < 3 sec
3-wire voltage signal	0 … 10 V / V_S = 15 ... 36 V_{DC} permissible load: R_{min} = 10 kΩ response time: < 3 msec
Without analogue output	V_S = 15 ... 36 V_{DC}
Accuracy [2]	p_N > 160 mbar: ≤ ± 0.35 % FSO 40 mbar ≤ p_N ≤ 160 mbar: ≤ ± 1 % FSO p_N < 40 mbar: ≤ ± 2 % FSO
[2] accuracy according to IEC 60770 – limit point adjustment (non-linearity, hysteresis, repeatability) *[3] with turn-down of span the analogue signal is adjusted automatically to the new measuring range*	
Performance	
Influence effects	supply: 0.05 % FSO / 10 V load: 0.05 % FSO / k
Long term stability	≤ ± 0.2 % FSO / year

Thermal effects (offset and span)				
Nominal pressure p_N [mbar]	≤ 10	≤ 20	≤ 250	> 250
Tolerance band [% FSO]	≤ ± 2	≤ ± 1.5	≤ ± 1	≤ ± 0.5
TC, average [% FSO / 10 K]	± 0.3	± 0.25	± 0.15	± 0.08
in compensated range	0 ... 60 °C			

Permissible temperatures	
Medium	-25 ... 125 °C
Electronics / environment	-25 ... 85 °C
Storage	-40 ... 100 °C
Electrical protection	
Short-circuit protection	permanent
Reverse polarity protection	no damage, but also no function
Electromagnetic compatibility	emission and immunity according to EN 61326
Mechanical stability	
Vibration	10 g RMS (20 ... 2000 Hz) according to DIN EN 60068-2-6
Shock	100 g / 11 msec according to DIN EN 60068-2-6
Materials	
Pressure port	aluminium, silver anodized
Housing	aluminium, silver anodised
Display housing	PA 6.6, polycarbonate
Seal	PUR
Sensor	silicon, RTV, ceramics Al_2O_3, Epoxy, stainless steel
Media wetted parts	pressure port, housing, seal, sensor

Miscellaneous	
Display	4-digit, red 7-segment-LED display, digit height 7 mm, range of indication -1999 ... +9999; accuracy 0.1 % ± 1 digit; digital damping 0.3 … 30 sec (programmable); measured value update 0.0 … 10 sec (programmable)
Current consumption (without contacts)	2-wire signal output current: max. 25 mA 3-wire signal output current: approx. 45 mA + signal current 3-wire signal output voltage: approx. 45 mA
Ingress protection	IP 65
Weight	approx. 350 g
Operational life	100 million load cycles
CE-conformity	EMC Directive: 2014/30/EU

Wiring diagrams

2-wire-system (current)

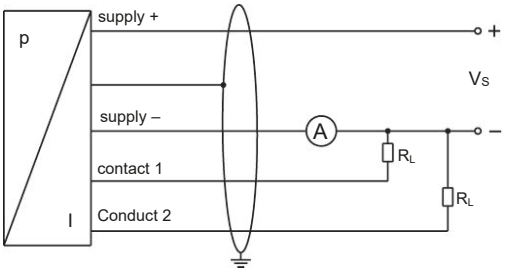

3-wire-system (current / voltage)

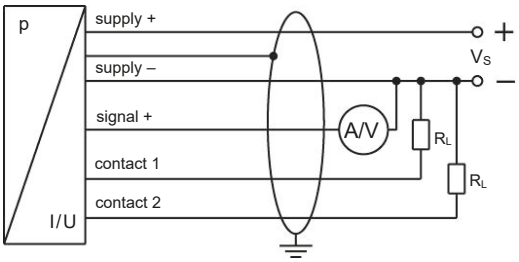

Pin configuration

Electrical connection	M12x1, plastic (5-pin)	M12x1, metal (5-pin)	ISO 4400
Supply +	1	1	1
Supply –	3	3	2
Signal + (only 3-wire)	2	2	3
Contact 1	4	4	3
Contact 2	5	5	-
Shield	via pressure port	plug housing / pressure port	ground pin

Electrical connections (size mm / in)

M12x1, plastic (5-pin)

M12x1, metal (5-pin)

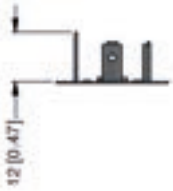

ISO 4400

Rotatability of display module

Dimensions (mm / in)

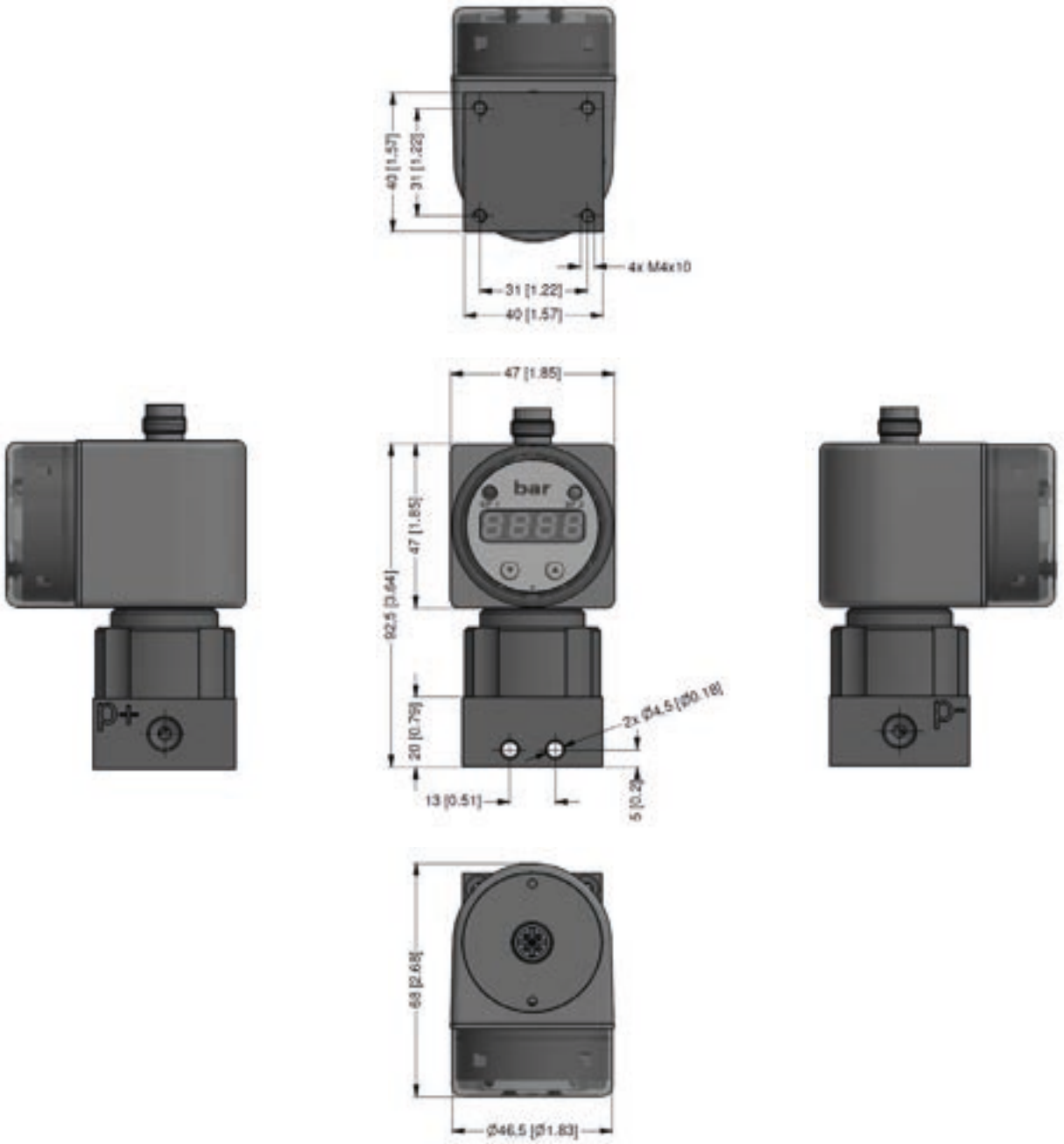

Mechanical connection (dimensions mm / in)

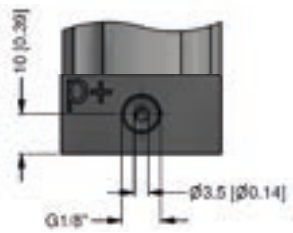

G1/8" internal thread

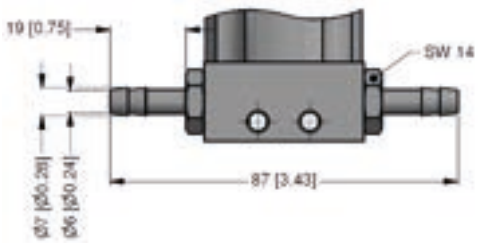

Ø6.6x11 (for flex. tubes Ø6)

Ordering code DS 233

DS 233 □□□-□□□□-□-□-□-□□□-□□□-□-□□□

Pressure																								
differential pressure	3	3	5																					
gauge pressure	3	3	6																					
Input	**[mbar]**																							
6				0	0	6	0																	
10				0	1	0	0																	
20				0	2	0	0																	
40				0	4	0	0																	
60				0	6	0	0																	
100				1	0	0	0																	
160				1	6	0	0																	
250				2	5	0	0																	
400				4	0	0	0																	
600				6	0	0	0																	
1000				1	0	0	1																	
-6 ... 6				S	0	0	6																	
-10 ... 10				S	0	1	0																	
-20 ... 20				S	0	2	0																	
-40 ... 40				S	0	4	0																	
-60 ... 60				S	0	6	0																	
-100 ... 100				S	1	0	0																	
-160 ... 160				S	1	6	0																	
-250 ... 250				S	2	5	0																	
-400 ... 400				S	4	0	0																	
-600 ... 600				S	6	0	0																	
-1000 ... 1000				S	1	0	2																	
customer				9	9	9	9																	consult
Output																								
without								0																
4 … 20 mA / 2-wire [1]								1																
0 … 10 V / 3-wire								3																
4 … 20 mA / 3-wire								7																
customer								9																consult
Contact																								
1 contact									1															
2 contacts									2															
Accuracy																								
standard for p_N > 160 mbar	0.35 % FSO									3														
standard for 40 mbar ≤ p_N ≤ 160 mbar	1.0 % FSO									8														
standard for p_N < 40 mbar	2.0 % FSO									G														
customer										9														consult
Electrical connection																								
plastic male plug M12x1 (5-pin)											N	0	1											
metal male plug M12x1 (5-pin)											N	1	1											
male and female plug ISO 4400 [1]											1	0	0											
customer											9	9	9											consult
Mechanical connection																								
G1/8" internal thread														Q	0	0								
Ø 6.6 x 11 (for flex. tubes Ø 6)														Y	0	0								
customer														9	9	9								consult
Seal																								
PUR, bonded																	6							
Special version																								
standard																			0	0	0			
customer																			9	9	9			consult

[1] max. 1 contact for 2-wire current signal with plug ISO 4400, no contact possible with 3-wire in combination with plug ISO 4400

DS 350

Electronic Pressure Switch with IO-Link Interface

Stainless Steel Sensor

accuracy according to IEC 60770:
standard: 0.5 % FSO / 0.35 % FSO
option: 0.25 % FSO

Nominal pressure

from 0 ... 100 mbar up to 0 ... 600 bar

Digital output signal

IO-Link according to specification V 1.1
smart sensor profile
data transfer 38.4 kbit/sec

Switchable output signal

PNP / NPN / 4 … 20 mA / 0 … 10 V

Special characteristics

- indication of measured values on a 4-digit LED display
- rotatable and configurable display module
- parameter settings via IO-Link or menu (VDMA-conform)
- additional information via IO-Link accessible

Optional versions

- different mechanical connections
- customer specific versions

The electronic pressure switch DS 350 is interesting for all users in plant and machine engineering, due to the integrated IO-Link interface to exchange process data, diagnostic reports and status messages with a superordinate control level, as standard. In addition, further information can be retrieved that allow conclusions to the application process.

Especially in mechanical engineering, great demand for flexible operating conditions have to be satisfied. Therefor the multi-rotable display module offers best readability for the user by a quick and easy adjustment. Also, the switchability of the output signal as switching signal or analogue signal (mA / V) increases flexibility and integration in different applications.

Preferred areas of use are

- Plant and machine engineering
- Environmental engineering (water – sewage – recycling)

DS 350

Technical Data

Input pressure range											
Nominal pressure gauge	[bar]	0.10	0.16	0.25	0.40	0.60	1	1.6	2.5	4	6
Nominal pressure absolute	[bar]	-	-	-	0.40	0.60	1	1.6	2.5	4	6
Overpressure (static)	[bar]	0.5	1	1	2	5	5	10	10	20	40
Burst pressure ≥	[bar]	1.5	1.5	1.5	3	7.5	7.5	15	15	25	50

Input pressure range											
Nominal pressure gauge / absolute	[bar]	10	16	25	40	60	100	160	250	400	600
Overpressure (static)	[bar]	40	80	80	105	210	600	600	1000	1000	1000
Burst pressure ≥	[bar]	50	120	120	210	420	1000	1000	1250	1250	1800
Vacuum resistance	[bar]	p_N ≥ 1 bar: unlimited vacuum resistant p_N < 1 bar: on request									

Supply	
Voltage supply	V_S = 18 ... 30 V_{DC}
Output signals	
Output signal 1	IO-Link / SIO (PNP / NPN) switchable
Output signal 2	4 … 20 mA / 3-wire or 0 … 10 V / 3-wire or PNP / NPN switchable
Signal characteristics switching signal	
Accuracy of switching points [1]	≤ ± 0.35 % FSO
Repeatability	≤ ± 0.1 % FSO
Max switching current	150 mA
Switching frequency	max. 170 Hz
Delay time	0.0 … 50.0 sec
Response time	< 12 msec
Signal characteristics analogue signal	
Accuracy [1]	standard: nominal pressure < 0.4 bar: ≤ ± 0.50 % FSO nominal pressure ≥ 0.4 bar: ≤ ± 0.35 % FSO option: nominal pressure ≥ 0.4 bar ≤ ± 0.25 % FSO
Long term stability	≤ ± 0.3 % FSO / year at reference conditions
Load (4 … 20 mA / 3-wire)	R_{max} = 330 Ω
Load (0 … 10 V / 3-wire)	R_{min} = 10 kΩ
Influence effects	supply: 0.05% FSO load: ≤ 0.1 % FSO
Adjustability	offset: ± 5 % span: -10 %
[1] accuracy according to IEC 60770 – limit point adjustment (non-linearity, hysteresis, repeatability)	
Thermal effects (offset and span)	
Thermal error	≤ ± 0.3 % FSO / 10 K
in compensated range	-25 ... 85 °C
Permissible temperatures	
Permissible temperatures	medium: -40 ... 125 °C electronics / environment / storage: -40 ... 85 °C
Electrical protection	
Short-circuit protection	permanent
Reverse polarity protection	no damage, but also no function
Electromagnetic compatibility	emission and immunity according to EN 61326
IO-Link	
Interface	IO-Link 1.1; slave
Data transfer	38.4 kbit/sec (COM 2)
Mode	SIO / IO-Link
Standard	IEC 61131-2 IEC 61131-9

Mechanical stability		
Vibration	10 g / 25 Hz … 2 kHz	according to DIN EN 60068-2-6
Shock	500 g / 1 msec	according to DIN EN 60068-2-27
Materials		
Display housing	PA 6.6	
Pressure port / housing	stainless steel 1.4404 (316L)	
Seal	standard: FKM options: EPDM welded version (only for pressure port according to EN 837 and NPT with $p_N \leq 40$ bar) others on request	
Diaphragm	stainless steel 1.4435 (316L)	
Media wetted parts	pressure port, seal, diaphragm	
Miscellaneous		
Display	4-digit, 7-segment-LED display on black base body, white, blue foil digit height 7 mm range of indication -1999 ... +9999 visible range 22.5 x 10.5 mm 4 LEDs for unit switching (bar, mbar, PSI, MPa) LED status display for IO-Link and contacts	
Operation	2 buttons	
Featured	functions according to VDMA 24574-1	
Turn-on time	110 msec	
Weight	approx. 230 g	
Operational life	100 million load cycles	
Current consumption	< 50 mA (without contacts)	
Ingress protection	IP 67	
Installation position	any [2]	
CE-conformity	EMC Directive: 2014/30/EU Pressure Equipment Directive: 2014/68/EU (module A) [3]	

[2] Pressure transmitters are calibrated in a vertical position with the pressure connection down. If this position is changed on installation there can be slight deviations in the zero point for pressure ranges $p_N \leq 1$ bar.
[3] This directive is only valid for devices with maximum permissible overpressure > 200 bar.

Wiring diagrams

3-wire-system / configuration of analogue output:

signal 1: IO-Link or contact
signal 2: analogue output

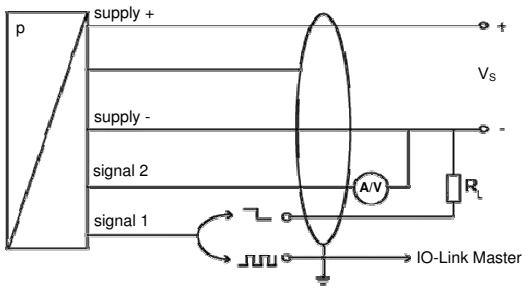

3-wire-system / configuration of contact:

signal 1: IO-Link or contact
signal 2: contact

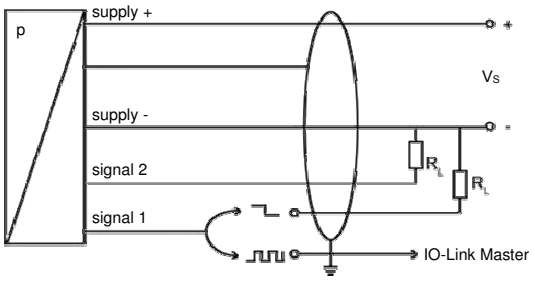

Electrical connection

Pin configuration	Description	M12x1 (4-pin), metal
Supply +	supply	1
Supply –	supply	3
Output signal 1	IO-Link / SIO (PNP / NPN)	4
Output signal 2	4 … 20 mA – 3-wire / 0 …10 V – 3-wire (PNP / NPN)	2
Shield	shielding	plug housing

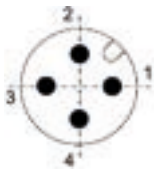

Dimensions (mm / in)

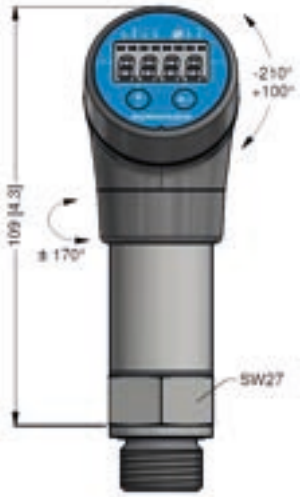

Mechanical connections (dimensions mm / in)

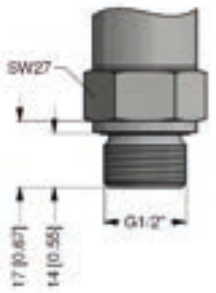

G1/2" DIN 3852

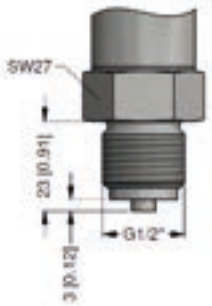

G1/2" EN 837

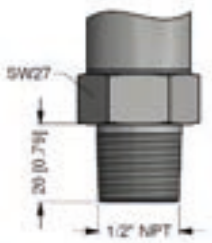

1/2" NPT

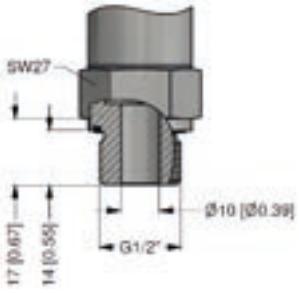

G1/2" open port
DIN 3852 (p_N ≤ 40 bar)

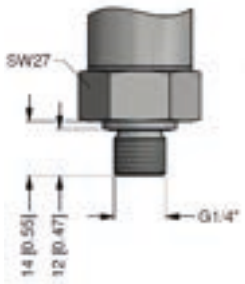

G1/4" DIN 3852

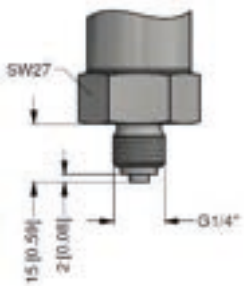

G1/4" EN 837

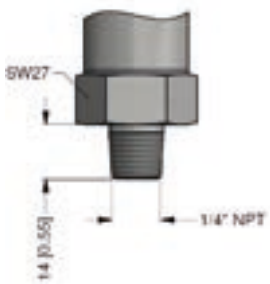

1/4" NPT

⇨ **metric threads and other versions on request**

Ordering code DS 350

DS 350 ☐☐☐ - ☐☐☐☐ - ☐☐ - ☐ - ☐☐☐ - ☐☐☐ - ☐ - ☐☐☐

Pressure																										
gauge		7	E	0																						
absolute [1]		7	E	1																						
Input	**[bar]**																									
0.10 [1]					1	0	0	0																		
0.16 [1]					1	6	0	0																		
0.25 [1]					2	5	0	0																		
0.40					4	0	0	0																		
0.60					6	0	0	0																		
1.0					1	0	0	1																		
1.6					1	6	0	1																		
2.5					2	5	0	1																		
4.0					4	0	0	1																		
6.0					6	0	0	1																		
10					1	0	0	2																		
16					1	6	0	2																		
25					2	5	0	2																		
40					4	0	0	2																		
60					6	0	0	2																		
100					1	0	0	3																		
160					1	6	0	3																		
250					2	5	0	3																		
400					4	0	0	3																		
600					6	0	0	3																		
customer					9	9	9	9																		consult
Output																										
IO-Link + PNP/NPN + analogue output [2]										I	X															
Accuracy																										
standard for $p_N \leq 0.4$ bar	0.50 % FSO											5														
standard for $p_N > 0.4$ bar	0.35 % FSO											3														
option for $p_N \geq 0.4$ bar	0.25 % FSO											2														
customer												9														consult
Electrical connection																										
male plug M12x1 (4-pin) / metal													M	1	B											
customer													9	9	9											consult
Mechanical connection																										
G1/2" DIN 3852																1	0	0								
G1/2" EN 837																2	0	0								
G1/4" DIN 3852																3	0	0								
G1/4" EN 837																4	0	0								
G1/2" DIN 3852 open port [3]																H	0	0								
1/2" NPT																N	0	0								
1/4" NPT																N	4	0								
customer																9	9	9								consult
Seal																										
FKM																			1							
EPDM																			3							
without (welded version) [4]																			2							
customer																			9							consult
Special version																										
standard																					0	0	0			
customer																					9	9	9			consult

[1] absolute pressure possible from 0.4 bar
[2] contact PNP/NPN switchable; analogue output 0 ... 10 V / 4 … 20 mA switchable
[3] not possible for nominal pressure $p_N > 40$ bar
[4] welded version only with pressure ports according to EN 837 and NPT, possible for $p_N \leq 40$ bar

DS 351

Electronic Pressure Switch with IO-Link Interface

Ceramic Sensor

accuracy according to IEC 60770:
0.5 % FSO

Nominal pressure

from 0 ... 0.4 bar up to 0 ... 600 bar gauge
from 0 ... 0.6 bar up to 0 ... 600 bar absolute

Digital output signal

IO-Link according to specification V 1.1

smart sensor profile

data transfer 38.4 kbit/sec

Switchable output signal

PNP / NPN / 4 … 20 mA / 0 … 10 V

Special characteristics

- indication of measured values on a 4-digit LED display
- rotatable and configurable display module
- parameter settings via IO-Link or menu (VDMA-conform)
- additional information via IO-Link accessible

Optional versions

- different mechanical connections
- pressure port in PVDF
- customer specific versions

The DS 351 has been designed for applications in machine tools or pneumatic and hydraulic systems. In combination with the optionally available PVDF pressure port also the usage in aggressive media is possible, whereby material resistance has to be checked in advance.

It offers an IO-Link interface as standard, which provides process data, diagnostics reports and status messages as well as other features, which are helpful for service / maintenance and condition analysis of a machine or plant.

The parameters are set either also via control level or via VDMA-compliant menu system, which can be carried out in situ by using two buttons.

The multiple, infinitely variable adjustability of the display as well as the individually parameterizable output signal (switching or analogue signal (mA / V)) support the user in realizing the measurement task.

Preferred areas of use are

- Plant and machine engineering
- Environmental engineering (water – sewage – recycling)

Input pressure range																			
Nominal pressure gauge	[bar]	-1…0	0.4	0.6	1	1.6	2.5	4	6	10	16	25	40	60	100	160	250	400	600
Nominal pressure absolute	[bar]	-	-	0.6	1	1.6	2.5	4	6	10	16	25	40	60	100	160	250	400	600
Overpressure	[bar]	4	1	2	2	4	4	10	10	20	40	40	100	100	200	400	400	600	800
Burst pressure ≥	[bar]	7	2	4	4	5	5	12	12	25	50	50	120	120	250	500	500	650	880
Vacuum resistance	[bar]	p_N ≥ 1 bar: unlimited vacuum resistance p_N < 1 bar: on request																	

Supply	
Voltage supply	V_S = 18 ... 30 V_{DC}
Output signals	
Output signal 1	IO-Link / SIO (PNP / NPN) switchable
Output signal 2	4 … 20 mA / 3-wire or 0 … 10 V / 3-wire or PNP / NPN switchable
Signal characteristics switching signal	
Accuracy of switching points [1]	≤ ± 0.5 % FSO
Repeatability	≤ ± 0.1 % FSO
Max switching current	150 mA
Switching frequency	max. 170 Hz
Delay time	0.0 … 50.0 sec
Response time	< 12 msec
Signal characteristics analogue signal	
Accuracy [1]	≤ ± 1 % FSO
Long term stability	≤ ± 0.3 % FSO / year at reference conditions
Load (4 … 20 mA / 3- wire)	R_{max} = 330 Ω
Load (0 … 10 V / 3- wire)	R_{min} = 10 kΩ
Influence effects	supply: 0.05% FSO load: ≤ 0.1 % FSO
Adjustability	offset: ± 5 % span: -10 %
[1] accuracy according to IEC 60770 – limit point adjustment (non-linearity, hysteresis, repeatability)	
Thermal effects (offset and span)	
Thermal error	≤ ± 0.3 % FSO / 10 K
in compensated range	-25 ... 85 °C
Permissible temperatures	
Permissible temperatures [2]	medium: -40 ... 125 °C electronics / environment: -40 ... 85 °C storage: -40 ... 100 °C
[2] for pressure port in PVDF the medium temperature is -30 … 60 °C	
Electrical protection	
Short-circuit protection	permanent
Reverse polarity protection	no damage, but also no function
Electromagnetic compatibility	emission and immunity according to EN 61326
IO-Link	
Interface	IO-Link 1.1; slave
Data transfer	38.4 kbit/sec (COM 2)
Mode	SIO / IO-Link
Standard	IEC 61131-2 IEC 61131-9
Mechanical stability	
Vibration	10 g / 25 Hz … 2 kHz according to DIN EN 60068-2-6
Shock	500 g / 1 msec according to DIN EN 60068-2-27
Materials	
Display housing	PA 6.6
Housing	stainless steel 1.4404 (316L)
Pressure port	standard: stainless steel 1.4404 (316L) option for G1/2" open port (with p_N ≤ 60 bar): PVDF
Seal	standard: FKM option: EPDM (for p_N ≤ 160 bar) others on request
Diaphragm	ceramics Al_2O_3 96 %
Media wetted parts	pressure port, seal, diaphragm

Miscellaneous	
Display	4-digit, 7-segment-LED display on black base body, white, blue foil, digit height 7 mm, range of indication -1999 ... +9999, visible range 22.5 x 10.5 mm 4 LEDs for unit switching (bar, mbar, PSI, MPa) LED status display for IO-Link and contacts
Operation	2 buttons
Featured	functions according to VDMA 24574-1
Turn-on time	110 msec
Weight	approx. 230 g
Operational life	100 million load cycles
Current consumption	< 50 mA (without contacts)
Ingress protection	IP 67
Installation position	any
CE-conformity	EMC Directive: 2014/30/EU Pressure Equipment Directive: 2014/68/EU (module A) [3]

[3] This directive is only valid for devices with maximum permissible overpressure > 200 bar.

Wiring diagrams

3-wire-system / configuration of analogue output:

signal 1: IO-Link or contact
signal 2: analogue output

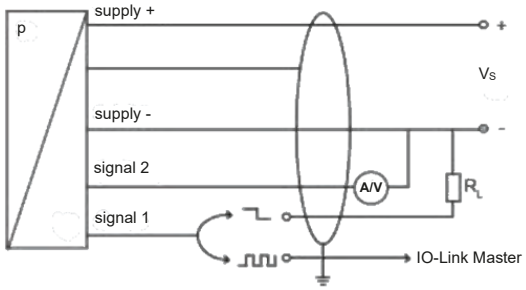

3-wire-system / configuration of contact:

signal 1: IO-Link or contact
signal 2: contact

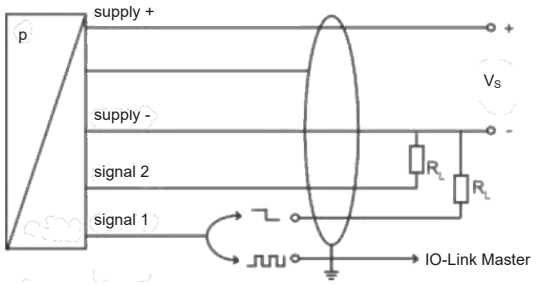

Electrical connection

Pin configuration	Description	M12x1 (4-pin), metal
Supply +	supply	1
Supply –	supply	3
Output signal 1	IO-Link / SIO (PNP / NPN)	4
Output signal 2	4 … 20 mA - 3-wire / 0 …10 V - 3-wire (PNP / NPN)	2
Shield	shielding	plug housing

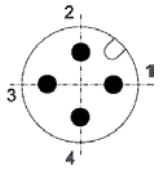

Dimensions (mm / in)

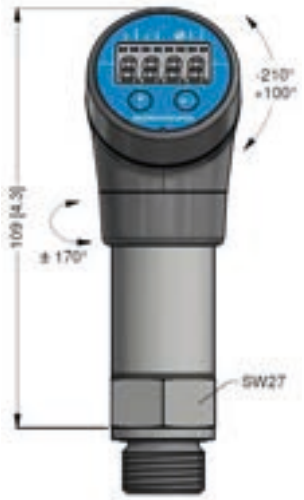

Mechanical connections (dimensions mm / in)

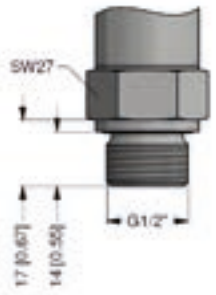

G1/2" DIN 3852

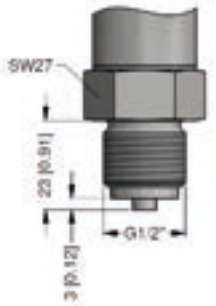

G1/2" EN 837

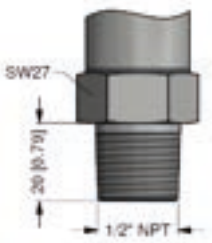

1/2" NPT

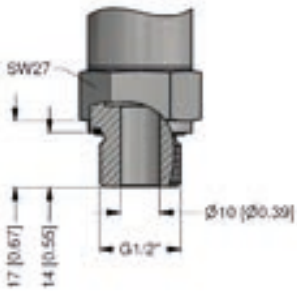

G1/2" DIN 3852 open port [4]

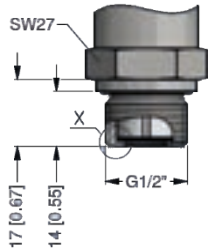

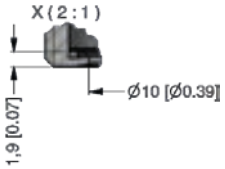

G1/2" DIN 3852 with semi-flush diaphragm
$p_N \leq 40$ bar

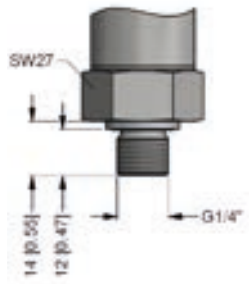

G1/4" DIN 3852

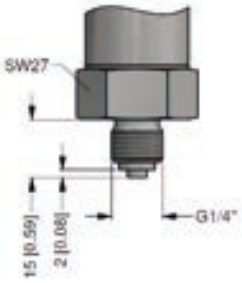

G1/4" EN 837

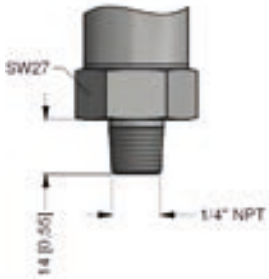

1/4" NPT

⇨ **metric threads and other versions on request**

[4] *pressure port in PVDF only possible for $p_N \leq 60$ bar*

DS 351

Ordering Code

Ordering code DS 351

DS 351 □□□-□□□□-□□-□-□□□-□□□-□-□-□-□□□

Pressure																													
gauge		7	E	2																									
absolute		7	E	3																									
Input	**[bar]**																												
only gauge	0.40				4	0	0	0																					
	0.60				6	0	0	0																					
	1.0				1	0	0	1																					
	1.6				1	6	0	1																					
	2.5				2	5	0	1																					
	4.0				4	0	0	1																					
	6.0				6	0	0	1																					
	10				1	0	0	2																					
	16				1	6	0	2																					
	25				2	5	0	2																					
	40				4	0	0	2																					
	60				6	0	0	2																					
	100				1	0	0	3																					
	160				1	6	0	3																					
	250				2	5	0	3																					
	400				4	0	0	3																					
	600				6	0	0	3																					
	-1 … 0				X	1	0	2																					
	customer				9	9	9	9																					consult
Output																													
IO-Link + PNP/NPN + analogue output [1]									I	X																			
Accuracy																													
	0.5 % FSO										5																		
	customer										9																		consult
Electrical connection																													
male plug M12x1 (4-pin) / metal												M	1	B															
	customer											9	9	9															consult
Mechanical connection																													
	G1/2" DIN 3852														1	0	0												
	G1/2" EN 837														2	0	0												
	G1/4" DIN 3852														3	0	0												
	G1/4" EN 837														4	0	0												
p_N ≤ 40 bar:	G1/2" DIN 3852 with semi-flush sensor														F	0	0												
	G1/2" DIN 3852 open port														H	0	0												
	1/2" NPT														N	0	0												
	1/4" NPT														N	4	0												
	customer														9	9	9												consult
Seal																													
	FKM																	1											
p_N ≤ 160 bar:	EPDM																	3											
	customer																	9											consult
Pressure port																													
	stainless steel 1.4404 (316L)																		1										
	PVDF [2]																		B										
	customer																		9										consult
Diaphragm																													
	ceramics Al_2O_3 96 %																			2									
	customer																			9									consult
Special version																													
	standard																						0	0	0				
	customer																						9	9	9				consult

[1] contact PNP/NPN switchable; analogue output 0 ... 10 V / 4 … 20 mA switchable

[2] PVDF only with G1/2" DIN 3852 open pressure port (up to 60 bar); permissible medium temperature: -30 … 60 °C

DS 400

Intelligent Electronic Pressure Switch Stainless Steel

Stainless Steel Sensor

accuracy according to IEC 60770:
standard: 0.35 % FSO
option: 0.25 % FSO

Nominal pressure

from 0 ... 100 mbar up to 0 ... 600 bar

Contacts

1 or 2 independent PNP contacts,
freely configurable

Analogue output

2-wire: 4 ... 20 mA
3-wire: 4 … 20 mA
others on request

Special characteristics

- indication of measured values on a 4-digit LED display
- rotatable and configurable display module

Optional versions

- **IS-version**
  Ex ia = intrinsically safe
  for gases and dust
- welded pressure sensor
- customer specific versions

The electronic pressure switch DS 400 is the successful combination of

- intelligent pressure switch
- digital display

and has been specially designed for numerous applications in various industrial sectors.

As standard the DS 400 offers a PNP contact and a display module, which is mounted rotable in the globe housing. Additional optional versions like e.g. an intrinsically safe version, a second contact and an analogue output complete the profile.

Preferred areas of use are

- Plant and machine engineering
- Heating and air conditioning
- Environmental engineering (water – sewage – recycling)

Input pressure range												
Nominal pressure gauge	[bar]	-1 … 0	0.10	0.16	0.25	0.40	0.60	1	1.6	2.5	4	6
Nominal pressure absolute	[bar]	-	-	-	-	0.40	0.60	1	1.6	2.5	4	6
Overpressure	[bar]	5	0.5	1	1	2	5	5	10	10	20	40
Burst pressure	[bar]	7.5	1.5	1.5	1.5	3	7.5	7.5	15	15	25	50

Nominal pressure gauge / absolute	[bar]	10	16	25	40	60	100	160	250	400	600
Overpressure	[bar]	40	80	80	105	210	210	600	1000	1000	1000
Burst pressure	[bar]	50	120	120	210	420	420	1000	1250	1250	1250
Vacuum resistance		p_N ≥ 1 bar: unlimited vacuum resistance						p_N < 1 bar: on request			

Contact [1]	
Number, type	standard: 1 PNP contact option: 2 independent PNP contacts
Max. switching current	contact rating 125 mA, short-circuit resistant; $V_{switch} = V_S - 2V$
Accuracy of contacts [2]	≤ ± 0.25 % FSO
Repeatability	≤ ± 0.1 % FSO
Switching frequency	2-wire: max. 10 Hz 3-wire: 50 Hz
Switching cycles	> 100 x 10^6
Delay time	0 ... 100 sec
[1] with IS-protection max. 1 contact possible	

Analogue output (optionally) / Supply		
2-wire current signal	4 ... 20 mA / V_S = 13 ... 36 V_{DC} permissible load: $R_{max} = [(V_S - V_{S\,min}) / 0.02\ A]\ \Omega$	response time: < 10 msec
2-wire current signal with IS-protection	4 ... 20 mA / V_S = 15 ... 28 V_{DC} permissible load: $R_{max} = [(V_S - V_{S\,min}) / 0.02\ A]\ \Omega$	response time: < 10 msec
3-wire current signal	4 ... 20 mA / V_S = 24 V_{DC} ± 10 % adjustable (turn-down of span 1:5) [3] permissible load: R_{max} = 500 Ω	response time: < 30 msec
Without analogue output	V_S = 15 ... 36 V_{DC}	
Accuracy [2]	standard: nominal pressure < 0.4 bar: ≤ ± 0.50 % FSO nominal pressure ≥ 0.4 bar: ≤ ± 0.35 % FSO option: nominal pressure ≥ 0.4 bar: ≤ ± 0.25 % FSO	
[2] accuracy according to IEC 60770 – limit point adjustment (non-linearity, hysteresis, repeatability) *[3] with turn-down of span the analogue signal is adjusted automatically to the new measuring range*		

Thermal effects (offset and span)			
Nominal pressure p_N	[bar]	-1 … 0	< 0.40	≥ 0.40
Tolerance band	[% FSO]	≤ ± 0.75	≤ ± 1	≤ ± 0.75
In compensated range	[°C]	-20 ... 85	0 ... 70	-20 … 85

Permissible temperatures	
Medium	-40 ... 125 °C
Electronics / environment	-40 ... 85 °C
Storage	-40 ... 100 °C

Electrical protection	
Short-circuit protection	permanent
Reverse polarity protection	no damage, but also no function
Electromagnetic compatibility	emission and immunity according to EN 61326

Mechanical stability		
Vibration	10 g RMS (25 ... 2000 Hz)	according to DIN EN 60068-2-6
Shock	500 g / 1 msec	according to DIN EN 60068-2-27

Materials	
Pressure port	stainless steel 1.4404 (316L)
Housing	stainless steel 1.4301 (304)
Housing cap	standard: plastic HDPE for option IS-protection: stainless steel 1.4301 (304)
Viewing glass	laminated safety glass
Seals (media wetted)	standard: FKM on request: welded version [4] and others
Diaphragm	stainless steel 1.4435 (316 L)
Media wetted parts	pressure port, seals, diaphragm
[4] welded version only for pressure ports according to EN 837 and NPT; possible for nominal pressure ranges p_N ≤ 40 bar	

Explosion protection (only for 4 … 20 mA / 2-wire)	
Approval AX14-DS 400	IBExU 06 ATEX 1050 X zone 0: II 1G Ex ia IIC T4 Ga zone 20: II 1D Ex ia IIIC T135 °C Da
Safety techn. maximum values	U_i = 28 V, I_i = 93 mA, P_i = 660 mW, C_i ≈ 0 pF, L_i ≈ 0 µH
Max. switching current [5]	70 mA
Permissible temperatures for environment	in zone 0: -20 ... 60 °C with p_{atm} 0.8 bar up to 1.1 bar in zone 1 or higher: -25 ... 70 °C
[5] the real switching current in the application depends on the power supply unit	
Miscellaneous	
Display	4-digit, 7-segment-LED display; visible range 37.2 x 11 mm; digit height 10 mm; range of indication -1999 ... +9999; accuracy 0.1 % ± 1 digit; digital damping 0.3 … 30 sec (programmable); measured value update 0.0 … 10 sec (programmable)
Current consumption (without contacts)	2-wire signal output current: max. 25 mA 3-wire signal output current: approx. 30 mA + signal current
Ingress protection	IP 67
Installation position	any [6]
Weight	approx. 400 g
Operational life	100 million load cycles
CE-conformity	EMC Directive: 2014/30/EU Pressure Equipment Directive: 2014/68/EU (module A) [7]
ATEX Directive	2014/34/EU

[6] Pressure switches are calibrated in a vertical position with the pressure connection down. If this position is changed on installation there can be slight deviation in the zero point for pressure ranges p_N ≤ 1 bar.
[7] This directive is only valid for devices with maximum permissible overpressure > 200 bar.

Wiring diagrams

2-wire-system (current)

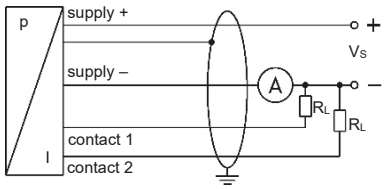

3-wire-system (current)

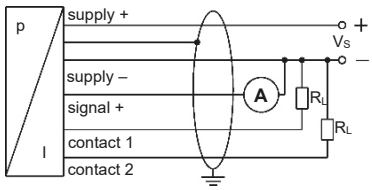

Pin configuration

Electrical connection	M12x1 / metal (5-pin)
Supply +	1
Supply –	3
Signal + (only 3-wire)	2
Contact 1	4
Contact 2	5
Shield	plug housing / pressure port

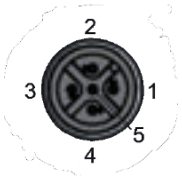

Designs [8]

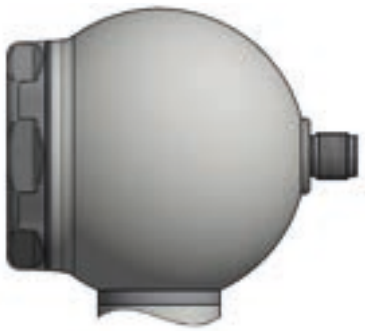

side display

45° display (on request)

[8] all designs in horizontal rotatable housing as standard

Dimensions (mm / in)

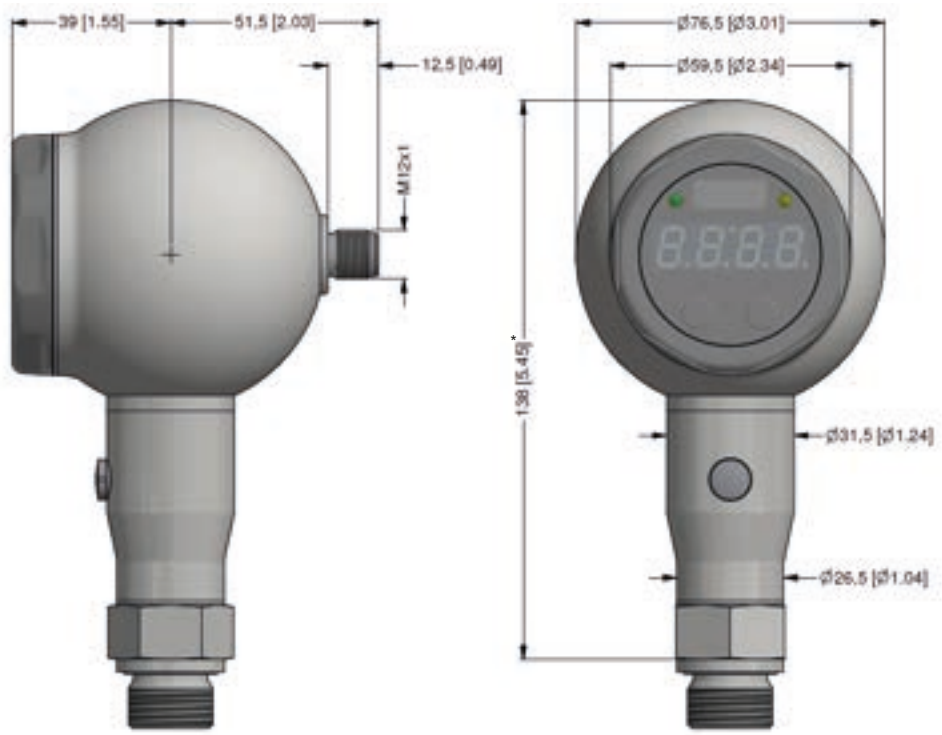

** for nominal pressure p_N > 400 bar increases the length of devices without IS-protection by 19 mm*

Mechanical connections (dimensions mm / in)

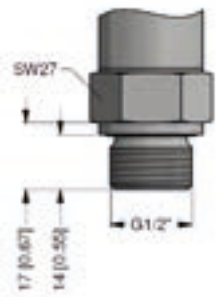

G1/2" DIN 3852

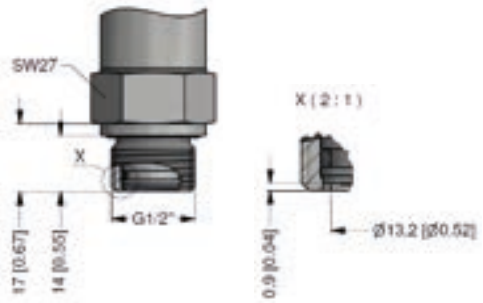

G1/2" flush DIN 3852
(p_N from 0.1 up to 40 bar)

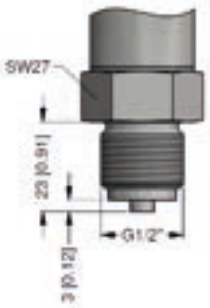

G1/2" EN 837

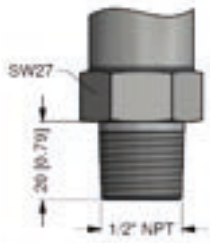

1/2" NPT

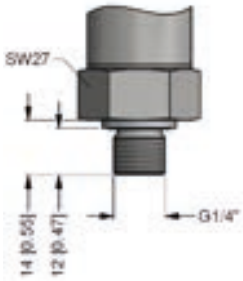

G1/4" DIN 3852

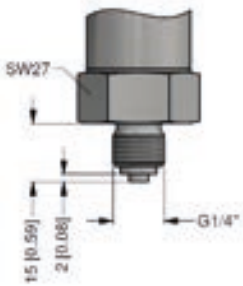

G1/4" EN 837

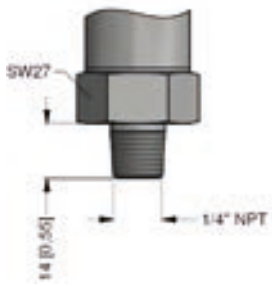

1/4" NPT

⇨ **metric threads and other versions on request**

Ordering code DS 400

DS 400 ☐☐☐ - ☐☐☐☐ - ☐☐ - ☐ - ☐ - ☐ - ☐☐☐ - ☐☐☐ - ☐ - ☐☐☐

Pressure																																
gauge [1]	7	A	0																													
absolute [2]	7	A	1																													
Input	**[bar]**																															
0.10 [2]				1	0	0	0																									
0.16 [2]				1	6	0	0																									
0.25 [2]				2	5	0	0																									
0.40				4	0	0	0																									
0.60				6	0	0	0																									
1.0				1	0	0	1																									
1.6				1	6	0	1																									
2.5				2	5	0	1																									
4.0				4	0	0	1																									
6.0				6	0	0	1																									
10				1	0	0	2																									
16				1	6	0	2																									
25				2	5	0	2																									
40				4	0	0	2																									
60				6	0	0	2																									
100				1	0	0	3																									
160				1	6	0	3																									
250				2	5	0	3																									
400				4	0	0	3																									
600				6	0	0	3																									
-1 … 0				X	1	0	2																									
customer				9	9	9	9																									consult
Design																																
side display								K	H																							
45° display								K	4																							consult
Analogue output																																
without											0																					
4 … 20 mA / 2-wire											1																					
4 … 20 mA / 3-wire, adjustable											7J																					
intrinsic safety 4 … 20 mA / 2-wire [3]											E																					
customer											9																					consult
Contact																																
1 contact													1																			
2 contacts [3]													2																			
Accuracy																																
standard for $p_N \geq 0.4$ bar 0.35 %														3																		
standard for $p_N < 0.4$ bar 0.50 %														5																		
option for $p_N \geq 0.4$ bar 0.25 %														2																		
customer														9																		consult
Electrical connection																																
male plug M12x1 (5-pin) / metal version															N	1	1															
customer															9	9	9															consult
Mechanical connection																																
G1/2" DIN 3852																		1	0	0												
G1/2" EN 837																		2	0	0												
G1/4" DIN 3852																		3	0	0												
G1/4" EN 837																		4	0	0												
G1/2" DIN 3852 with flush sensor [4]																		F	0	0												
1/2" NPT																		N	0	0												
1/4" NPT																		N	4	0												
customer																		9	9	9												consult
Seal																																
FKM																					1											
without (welded version) [5]																					2											consult
customer																					9											consult
Special version																																
standard																							0	0	0							
customer																							9	9	9							consult

[1] from 60 bar: measurement starts with ambient pressure
[2] absolute pressure possible from 0.4 bar
[3] with IS version max. 1 contact is possible
[4] only possible for nominal pressure ranges $p_N \leq 40$ bar
[5] welded version only with pressure ports according to EN 837 and NPT; possible for nominal pressure ranges $p_N \leq 40$ bar

DS 401

Intelligent Electronic Pressure Switch Stainless Steel

Ceramic Sensor

accuracy according to IEC 60770:
0.5 % FSO

Nominal pressure

from 0 ... 400 mbar up to 600 bar

Contacts

1 or 2 independent PNP contacts,
freely configurable

Analogue output

2-wire: 4 ... 20 mA
3-wire: 4 … 20 mA
others on request

Special characteristics

- indication of measured values on a 4-digit LED display
- rotatable and configurable display module

Optional versions

- **IS-version**
  Ex ia = intrinsically safe
  for gases and dust
- pressure port PVDF
- customer specific versions

The electronic pressure switch DS 401 is the successful combination of

- intelligent pressure switch
- digital display

and has been specially designed for universal usage in industry applications; with flush diaphragm the DS 401 is suitable for the usage in viscous, pasty or highly contaminated media. The rotatable stainless steel globe housing is predestined for rough conditions and difficult installing conditions, caused by the high functionality and robustness. As standard the DS 401 offers a PNP contact and is optionally available with a second, independent contact. Additionally the DS 401 could be equipped with an analogue output.

Preferred areas of use are

- Plant and machine engineering
- Environmental engineering (water – sewage – recycling)
- Water
- Hydraulic oil

Input pressure ranges																		
Nominal pressure gauge [bar]	-1…0	0.4	0.6	1	1.6	2.5	4	6	10	16	25	40	60	100	160	250	400	600
Nominal pressure abs. [bar]	-	-	0.6	1	1.6	2.5	4	6	10	16	25	40	60	100	160	250	400	600
Level gauge [mH_2O]	-	4	6	10	16	25	40	60	100	160	250	400	600	-	-	-	-	-
Overpressure [bar]	4	1	2	2	4	4	10	10	20	40	40	100	100	200	400	400	600	800
Burst pressure ≥ [bar]	7	2	4	4	5	5	12	12	25	50	50	120	120	250	500	500	650	880
Vacuum resistance	p_N ≥ 1 bar: unlimited vacuum resistance p_N < 1 bar: on request																	

Contact [1]	
Number, type	standard: 1 PNP contact option: 2 independent PNP contacts
Max. switching current	contact rating 125 mA, short-circuit resistant; $V_{Switch} = V_S$ - 2V
Accuracy of contacts [2]	≤ ± 0.5 % FSO
Repeatability	≤ ± 0.2 % FSO
Switching frequency	2-wire: max. 10 Hz / 3-wire: 50 Hz
Switching cycles	> 100 x 10^6
Delay time	0 ... 100 sec
[1] with Ex-protection max. 1 contact possible	
Analogue output (optionally) / Supply	
2-wire current signal	4 ... 20 mA / V_S = 13 ... 36 V_{DC} permissible load: $R_{max} = [(V_S – V_{S\,min}) / 0.02\ A]\ \Omega$ response time: < 10 msec
2-wire current signal, IS-protection	4 ... 20 mA / V_S = 15 ... 28 V_{DC} permissible load: $R_{max} = [(V_S – V_{S\,min}) / 0.02\ A]\ \Omega$ response time: < 10 msec
3-wire current signal	4 ... 20 mA / V_S = 24 V_{DC} ± 10 % adjustable (turn-down of span 1:5) [3] permissible load: R_{max} = 500 Ω response time: < 30 msec
Without analogue output	V_S = 15 ... 36 V_{DC}
Accuracy [2]	≤ ± 0.5 % FSO
[2] accuracy according to IEC 60770 – limit point adjustment (non-linearity, hysteresis, repeatability) *[3] with turn-down of span the analogue signal is adjusted automatically to the new measuring range*	
Thermal effects (offset and span)	
Thermal error	≤ ± 0.2 % FSO / 10 K
in compensated range	0 ... 85 °C
Permissible temperatures	
Medium [4]	-40 ... 125 °C
Electronics / environment	-40 ... 85 °C
Storage	-40 ... 100 °C
[4] for pressure port in PVDF the medium temperature is -30 … 60 °C	
Electrical protection	
Short-circuit protection	permanent
Reverse polarity protection	no damage, but also no function
Electromagnetic compatibility	emission and immunity according to EN 61326
Mechanical stability	
Vibration	10 g RMS (25 ... 2000 Hz) according to DIN EN 60068-2-6
Shock	500 g / 1 msec according to DIN EN 60068-2-27
Materials	
Pressure port	standard: 1.4404 (316L) option for G1/2" open port (up to 60 bar): PVDF
Housing	stainless steel 1.4301 (304)
Housing cap	standard: plastic HDPE for option IS-protection: stainless steel 1.4301 (304)
Viewing glass	laminated safety glass
Seals	standard: FKM option: EPDM (p_N ≤ 160 bar) others on request
Diaphragm	ceramics Al_2O_3 96 %
Media wetted parts	pressure port, seals, diaphragm
Explosion protection (only for 4 … 20 mA / 2-wire)	
Approval AX14-DS 401	IBExU06ATEX1050 X zone 0: II 1G Ex ia IIC T4 Ga zone 20: II 1D Ex ia IIIC T135 °C Da
Safety technical maximum values	U_i = 28 V, I_i = 93 mA, P_i = 660 mW, C ≈ 0 nF, L_i ≈ 0 µH
Max. switching current [5]	70 mA
Permissible temperatures for environment	in zone 0: -20 ... 60 °C with p_{atm} 0.8 bar up to 1.1 bar in zone 1 or higher: -25 ... 70 °C
[5] the real switching current in the application depends on the power supply unit	

Miscellaneous	
Display	4-digit, 7-segment-LED display; visible range 37.2 x 11 mm; digit height 10 mm, range of indication -1999 ... +9999; accuracy 0.1 % ± 1 digit digital damping 0.3 … 30 sec (programmable) measured value update 0.0 … 10 sec (programmable)
Option oxygen application [6]	for p_N ≤ 25 bar:O-ring in FKM Vi 567 (with BAM-approval); permissible maximum values are 25 bar / 150° C
Current consumption (without contacts)	2-wire signal output current: max. 25 mA 3-wire signal output current: approx. 30 mA + signal current
Ingress protection	IP 67
Installation position	any
Weight	approx. 400 g
Operational life	100 million load cycles
CE-conformity	EMC Directive: 2014/30/EU Pressure Equipment Directive: 2014/68/EU (module A) [7]
ATEX Directive	2014/34/EU

[6] not possible with flush pressure ports
[7] This directive is only valid for devices with maximum permissible overpressure > 200 bar

Wiring diagrams

2-wire-system (current)

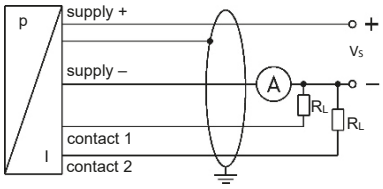

3-wire-system (current)

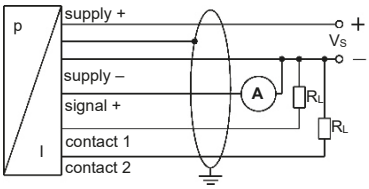

Pin configuration

Electrical connection	M12x1 / metal (5-pin)
Supply +	1
Supply –	3
Signal + (only 3-wire)	2
Contact 1	4
Contact 2	5
Shield	plug housing / pressure port

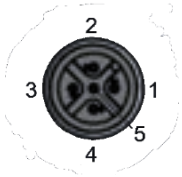

Dimensions (mm / in)

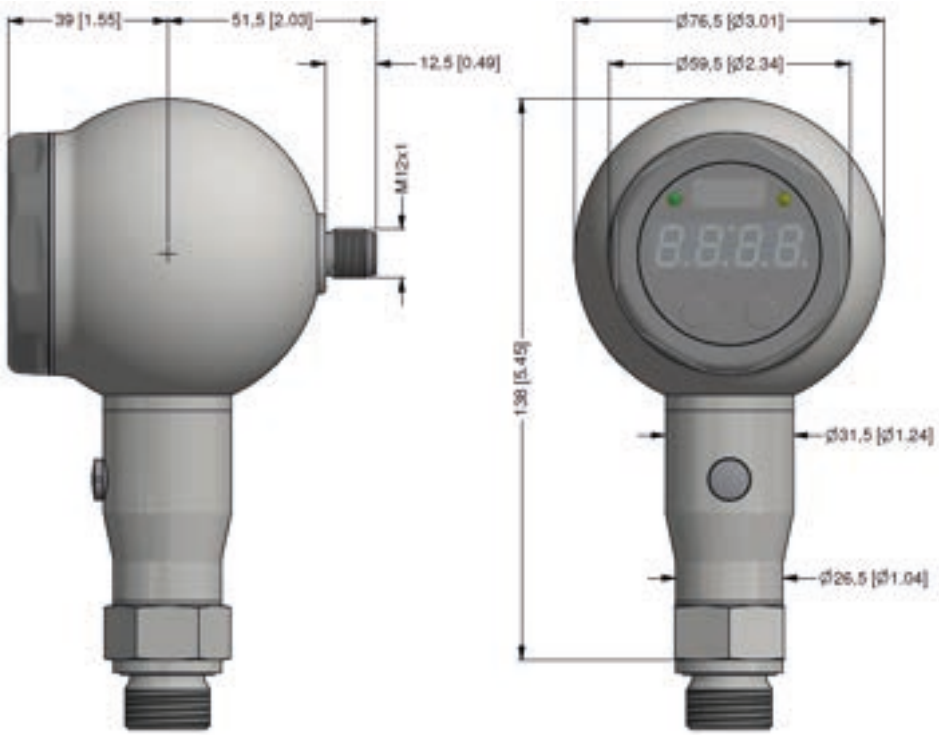

Mechanical connections (dimensions mm / in)

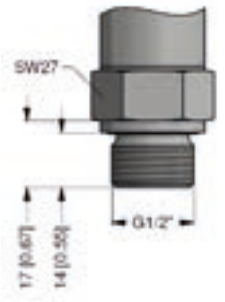

G1/2" DIN 3852

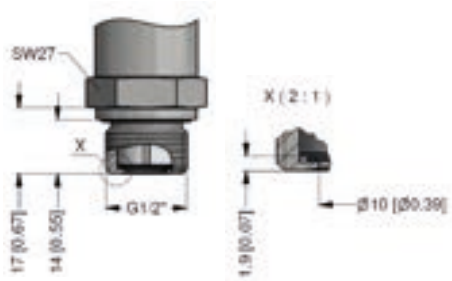

G1/2" semi-flush DIN 3852
(p_N from 0.4 up to 60 bar)

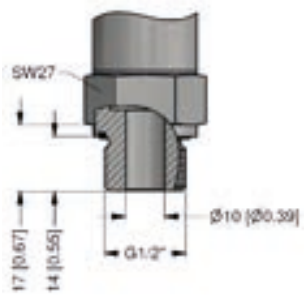

G1/2" open port
DIN 3852

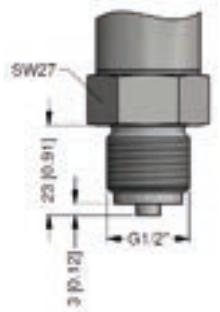

G1/2" EN 837

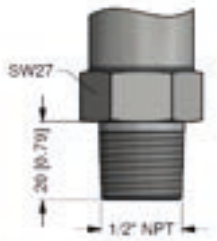

1/2" NPT

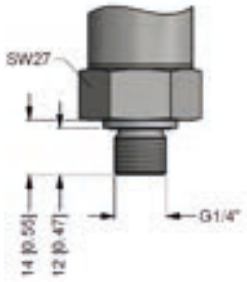

G1/4" DIN 3852

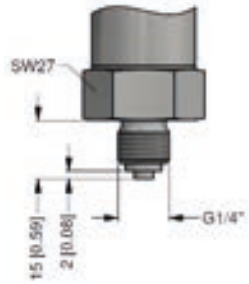

G1/4" EN 837

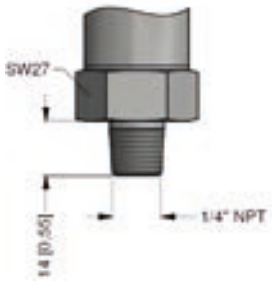

1/4" NPT

⇨ **metric threads and other versions on request**

Designs [8]

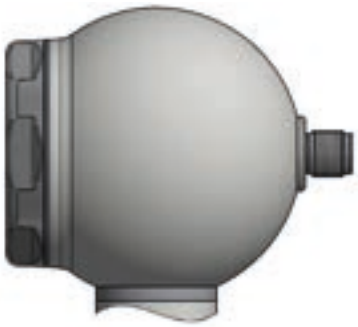

side display

45° display (on request)

[8] *all designs in horizontal rotatable housing as standard*

DS 401

Ordering Code

Ordering code DS 401

DS 401 ☐☐☐-☐☐☐☐-☐☐-☐-☐-☐-☐☐☐-☐☐☐-☐-☐-☐-☐☐☐

Pressure																																			
gauge				7	A	2																													
gauge in mH_2O				7	A	E																													
absolute				7	A	3																													
Input	**[mH_2O]**	**[bar]**																																	
	4	0.4					4	0	0	0																									
	6	0.6					6	0	0	0																									
	10	1.0					1	0	0	1																									
	16	1.6					1	6	0	1																									
	25	2.5					2	5	0	1																									
	40	4.0					4	0	0	1																									
	60	6.0					6	0	0	1																									
	100	10					1	0	0	2																									
	160	16					1	6	0	2																									
	250	25					2	5	0	2																									
	400	40					4	0	0	2																									
	600	60					6	0	0	2																									
		100					1	0	0	3																									
		160					1	6	0	3																									
		250					2	5	0	3																									
		400					4	0	0	3																									
		600					6	0	0	3																									
		-1 … 0					X	1	0	2																									
customer							9	9	9	9																									consult
Design																																			
side display											K	H																							
45° display											K	4																							consult
Analogue output																																			
without													0																						
4 … 20 mA / 2-wire													1																						
4 … 20 mA / 3-wire, adjustable													7J																						
intrinsic safety 4 … 20 mA / 2-wire [1]													E																						
customer													9																						consult
Contact																																			
1 contact															1																				
2 contacts [1]															2																				
Accuracy																																			
0.5 % FSO																	5																		
customer																	9																		consult
Electrical connection																																			
male plug M12x1 (5-pin) / metal version																			N	1	1														
customer																			9	9	9														consult
Mechanical connection																																			
G1/2" DIN 3852																						1	0	0											
G1/2" EN 837																						2	0	0											
G1/4" DIN 3852																						3	0	0											
G1/4" EN 837																						4	0	0											
G1/2" DIN 3852 with semi-flush sensor [2]																						F	0	0											
G1/2" DIN 3852 open pressure port																						H	0	0											
1/2" NPT																						N	0	0											
1/4" NPT																						N	4	0											
customer																						9	9	9											consult
Seal																																			
FKM																									1										
EPDM [3]																									3										
customer																									9										consult
Pressure port																																			
stainless steel 1.4404 (316L)																										1									
PVDF [4]																										B									
customer																										9									consult
Diaphragm																																			
ceramics Al_2O_3 96%																											2								
customer																											9								consult
Special version																																			
standard																													0	0	0				
oxygen application [5]																													0	0	7				
customer																													9	9	9				consult

[1] with IS version max. 1 contact is possible
[2] G1/2" flush up to 60 bar and nominal pressure abs. on request
[3] possible for nominal pressure ranges $p_N \leq 160$ bar
[4] PVDF only with G1/2" DIN 3852 open pressure port (up to 60 bar); Ex-protection not possible; permissible medium temperature: -30 … 60 °C
[5] oxygen application with FKM-seal up to 25 bar possible

DS 200P

Electronic Pressure Switch

Pressure Ports and Process Connections with Flush Welded Stainless Steel Diaphragm

accuracy according to IEC 60770:
standard: 0.35 % FSO
option: 0.25 % FSO

Nominal pressure

from 0 ... 100 mbar up to 0 ... 40 bar

Contacts

1, 2 or 4 independent PNP contacts, freely configurable

Analogue output

2-wire: 4 ... 20 mA
3-wire: 4 … 20 mA / 0 … 10 V
others on request

Special characteristics

- indication of measured values on a 4-digit LED display
- rotable and configurable display module
- configurable contacts (switch on / switch off points, hysteresis / window mode, switch on / switch off delay)

Optional versions

- IS-version
  Ex ia = intrinsically safe for gases
- customer specific versions

The electronic pressure switch DS 200P is the successful combination of

- intelligent pressure switch
- digital display

and is suitable for the usage with viscous and pasty media.

As standard the DS 200P offers a PNP contact and a rotatable display module with 4-digit LED display. Optional versions like e. g. an intrinsically safe version, max. four contacts and an analogue output complete the profile.

Preferred areas of use are

Food industry

Pharmacy

Input pressure range[1]																
Nominal pressure gauge	[bar]	-1 ... 0	0.10	0.16	0.25	0.40	0.60	1	1.6	2.5	4	6	10	16	25	40
Nominal pressure abs.	[bar]	-	-	-	-	0.40	0.60	1	1.6	2.5	4	6	10	16	25	40
Overpressure	[bar]	5	0.5	1	1	2	5	5	10	10	20	40	40	80	80	105
Burst pressure ≥	[bar]	7.5	1.5	1.5	1.5	3	7.5	7.5	15	15	25	50	50	120	120	210
Vacuum resistance		p_N ≥ 1 bar: unlimited vacuum resistance								p_N < 1 bar: on request						

[1] consider the pressure resistance of fitting and clamps

Contact [2]	
Standard	1 PNP contact
Options	2 independent PNP contacts 4 independent PNP contacts (possible with M12x1, 8-pin for 4 ... 20 mA/3-wire; 0 ... 10 V/3-wire on request)
Max. switching current	4 ... 20 mA / 2- and 3-wire: contact rating 125 mA, short-circuit resistant; $V_{Switch} = V_S - 2V$ 0 ... 10 V / 3-wire: contact rating 125 mA, short-circuit resistant
Accuracy of contacts [3]	standard: p_N < 0.4 bar: ≤ ± 0.5 % FSO p_N ≥ 0.4 bar: ≤ ± 0.35 % FSO option: p_N ≥ 0.4 bar: ≤ ± 0.25 % FSO
Repeatability	≤ ± 0.1 % FSO
Switching frequency	max. 10 Hz
Switching cycles	> 100 x 10^6
Delay time	0 ... 100 sec

[2] max. 1 contact for 2-wire current signal with plug ISO 4400 as well as 2-wire current signal with IS-protection no contact possible with 3-wire in combination with plug ISO 4400
[3] accuracy according to IEC 60770 – limit point adjustment (non-linearity, hysteresis, repeatability)

Analogue output (optionally) / Supply	
2-wire current signal	4 ... 20 mA / V_S = 13 ... 36 V_{DC} permissible load: $R_{max} = [(V_S – V_{S\,min}) / 0.02\ A]\ \Omega$ response time: < 10 msec
2-wire current signal with IS-protection	4 ... 20 mA / V_S = 15 ... 28 V_{DC} permissible load: $R_{max} = [(V_S – V_{S\,min}) / 0.02\ A]\ \Omega$ response time: < 10 msec
3-wire current signal	4 ... 20 mA / V_S = 19 ... 30 V_{DC} adjustable (turn-down of span 1:5) [4] permissible load: R_{max} = 500 Ω response time: < 0.5 sec
3-wire voltage signal	0 … 10 V / V_S = 15 ... 36 V_{DC} permissible load: R_{min} = 10 kΩ response time: < 10 msec
Without analogue output	V_S = 15 ... 36 V_{DC}
Accuracy [3]	standard: p_N < 0.4 bar: ≤ ± 0.5 % FSO p_N ≥ 0.4 bar: ≤ ± 0.35 % FSO option: p_N ≥ 0.4 bar: ≤ ± 0.25 % FSO

[4] with turn-down of span the analogue signal is adjusted automatically to the new measuring range

Thermal errors (offset and span) [5]				
Nominal pressure p_N	[bar]	-1 … 0	< 0.40	≥ 0.40
Tolerance band	[% FSO]	≤ ± 0.75	≤ ± 1.5	≤ ± 0.75
In compensated range	[°C]	-20 ... 85	0 ... 50	-20 ... 85

[5] an optional cooling element can influence thermal effects for offset and span depending on installation position and filling conditions

Permissible temperatures		
Filling fluid	silicone oil	food compatible oil
Medium [6]	-40 ... 125 °C	-10 ... 125 °C
Medium with cooling element [7]	overpressure: -40 ... 300 °C vacuum: -40 ... 150 °C [8]	overpressure: -10 ... 250 °C vacuum: -10 ... 150 °C [8]
Electronics / environment	-40 ... 85 °C	
Storage	-40 ... 100 °C	

[6] max. temperature of the medium for overpressure > 0 bar: 150 °C for 60 minutes with a max. environmental temperature of 50 °C
[7] max. temperature depends on the used sealing material, type of seal and installation
[8] also for $p_{abs} \leq 1$ bar

Electrical protection	
Short-circuit protection	permanent
Reverse polarity protection	no damage, but also no function
Electromagnetic compatibility	emission and immunity according to EN 61326

Mechanical stability		
Vibration	5 g RMS (25 ... 2000 Hz)	according to DIN EN 60068-2-6
Shock	100 g / 11 msec	according to DIN EN 60068-2-27

Filling fluids	
Standard	silicone oil
Options	food compatible oil according to 21CFR178.3570 (Mobil SHC Cibus 32; Category Code: H1; NSF Registration No.: 141500)

Materials	
Pressure port	inch thread: stainless steel 1.4404 (316 L) G1" cone, Clamp, diary pipe, Varivent®: stainless steel 1.4435 (316 L)
Housing	stainless steel 1.4404 (316 L)
Display housing	PA 6.6, Polycarbonate
Seals (media wetted)	standard: FKM (recommended for medium temperatures ≤ 200 °C) option: FFKM (recommended for medium temperatures < 260 °C) others on request Clamp, dairy pipe, Varivent®: without
Diaphragm	standard: stainless steel 1.4435 (316 L) option: Hastelloy® C-276 (2.4819); Tantalum on request
Media wetted parts	pressure port, seals, diaphragm
Explosion protection (only for 4 … 20 mA / 2-wire)	
Approval AX14-DS 200P	IBExU06ATEX1050 X zone 1: II 2G Ex ia IIC T4 Gb
Safety technical maximum values	U_i = 28 V, I_i = 93 mA, P_i = 660 mW, C ≈ 0 nF, L_i ≈ 0 µH
Max. switching current [9]	70 mA
Permissible temperatures for environment	-25 ... 70 °C
Connecting cables (by factory)	cable capacitance: signal line/shield also signal line/signal line: 100 pF/m cable inductance: signal line/shield also signal line/signal line: 1 µH/m
[9] the real switching current in the application depends on the power supply unit	
Miscellaneous	
EHEDG certificate Type EL Class I	EHEDG conformity is only ensured in combination with an approved seal. This is e.g. for - Clamp (C61, C62, C63): T-ring-seal from Combifit International B.V. - Varivent® (P41): EPDM-O-ring which is FDA-listed - dairy pipe (M73, M75, M76): ASEPTO-STAR k-flex upgrade seal by Kieselmann GmbH
Display	4-digit, red 7-segment-LED display; digit height 7 mm; range of indication -1999 ... +9999; accuracy 0.1 % ± 1 digit; digital damping 0.3 … 30 sec (programmable); measured value update 0.0 … 10 sec (programmable)
Current consumption (without contacts)	2-wire signal output current: max. 25 mA 3-wire signal output voltage: approx. 45 mA 3-wire signal output current: approx. 45 mA + signal current
Ingress protection	IP 65
Installation position	any (standard calibration in a vertical position with the pressure port connection down; different installation position for p_N ≤ 2 bar have to be specified in the order)
Surface roughness	pressure port R_a < 0.8 µm (media wetted parts) diaphragm R_a < 0.15 µm weld seam R_a < 0.8 µm
Weight	approx. 160 ... 250 g
Operational life	100 million load cycles
CE-conformity	EMC Directive: 2014/30/EU
ATEX Directive	2014/34/EU

Wiring diagrams

2-wire-system (current)

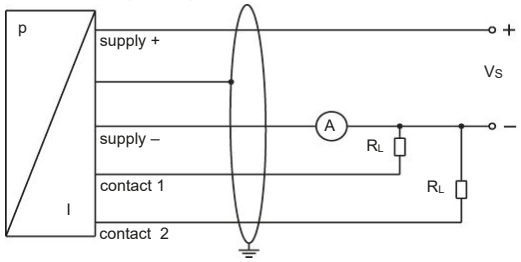

3-wire-system (current/voltage)

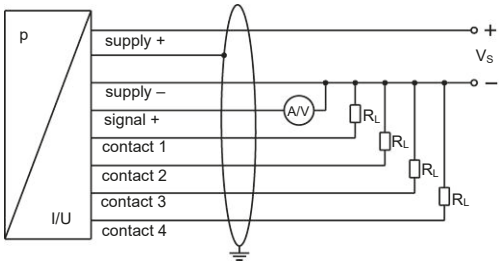

Pin configuration

Electrical connection	M12x1 plastic (5-pin)	M12x1 metal (5-pin)	M12x1 plastic (8-pin)	ISO 4400	Binder series 723 (5-pin)
		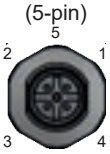			
Supply +	1	1	1	1	1
Supply –	3	3	3	2	3
Signal + (only 3-wire)	2	2	2	3	2
Contact 1	4	4	4	3	4
Contact 2	5	5	5	-	5
Contact 3	-	-	6	-	-
Contact 4	-	-	7	-	-
Shield	via pressure port	plug housing/ pressure port	via pressure port	ground contact ⏚	plug housing/ pressure port

Electrical connections (dimensions mm / in)

M12x1 plastic
(5-pin)

M12x1 metal
(5-pin)

M12x1 plastic
(8-pin)

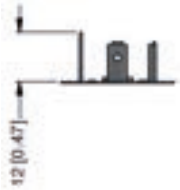

ISO 4400

Binder series 723
(5-pin)

Dimensions (mm / in)

top view

rotatability of display module

Cooling element up to 300 °C [7] (optionally)

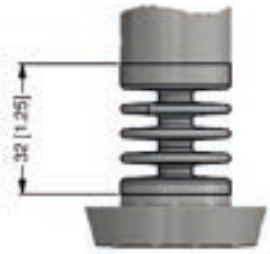

[7] *max. temperature depends on the used sealing material, type of seal and installation*

Mechanical connection (dimensions mm / in)

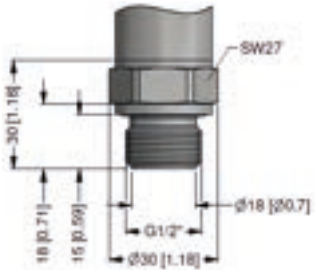

G1/2" flush DIN 3852
$p_N \geq 1$ bar

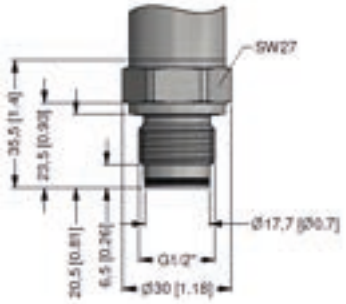

G1/2" flush with radial o-ring
$p_N \geq 1$ bar

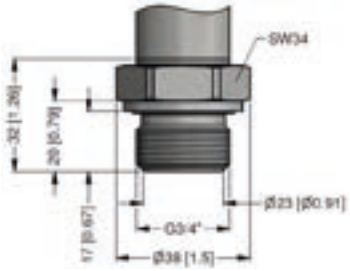

G3/4" flush DIN 3852

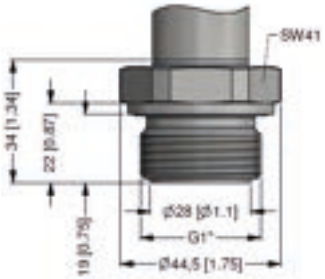

G1" flush DIN 3852

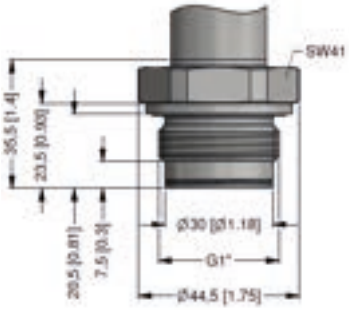

G1" flush with radial o-ring

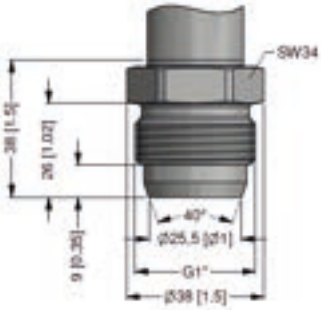

G1" cone

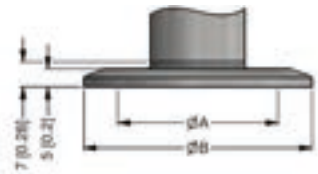

dimensions in mm [in]			
size	DN 25	DN 32	DN 50
A	23.0 [0.91]	23.0 [0.91]	45 [1.77]
B	50.5 [1.99]	50.5 [1.99]	64 [2.52]
p_N [bar]	0.25 ... 16	≤ 16	≤ 16

Clamp (DIN 32676)

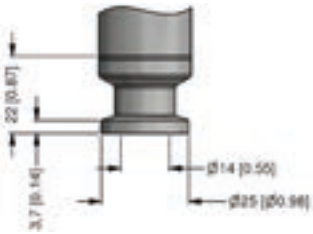

Clamp 3/4″ (DIN 32676)
4 bar ≤ p_N ≤ 8 bar

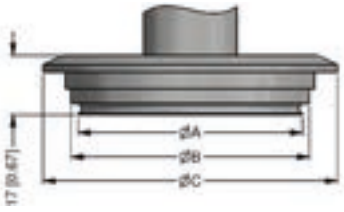

dimensions in mm [in]	
size	DN 40/50
A	64 [2.52]
B	68 [2.68]
C	84 [3.31]

Varivent® DN 40/50
$p_N \leq 25$ bar

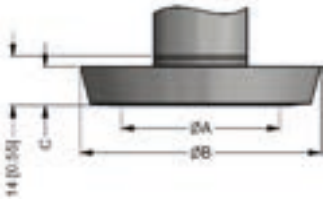

dimensions in mm [in]			
size	DN 25	DN 40	DN 50
A	23 [0.91]	32 [1.26]	45 [1.77]
B	44 [1.73]	56 [1.20]	68.5 [2.70]
C	10 [0.39]	10 [0.39]	11 [0.43]
p_N [bar]	≤ 40	≤ 40	≤ 25

diary pipe (DIN 11851)

⇨ **SIL- and SIL-Ex version: total length increases by 26.5 mm!**

⇨ **metric threads and other versions on request**

Varivent® is a brand name of GEA Tuchenhagen GmbH, Hastelloy® is a brand name of Haynes International Inc.

DS 200 P

Ordering Code

Ordering code DS 200P

DS 200P □□□-□□□□-□-□-□-□□□-□□□-□-□-□-□□□

Pressure			
gauge	785		
absolute	786		
Input	**[bar]**		
0.10	1000		
0.16	1600		
0.25	2500		
0.40	4000		
0.60	6000		
1.0	1001		
1.6	1601		
2.5	2501		
4.0	4001		
6.0	6001		
10	1002		
16	1602		
25	2502		
40	4002		
-1 … 0	X102		
customer	9999		consult
Analogue output			
without	0		
4 … 20 mA / 2-wire	1		
0 … 10 V / 3-wire	3		
4 … 20 mA / 3-wire, adjustable	7		
intrinsic safety 4 … 20 mA / 2-wire [1]	E		
customer	9		consult
Contact			
1 contact [1, 2]	1		
2 contacts [1, 2]	2		
4 contacts [3]	4		consult
Accuracy			
standard for p_N > 0,4 bar: 0.35 % FSO	3		
standard for p_N ≤ 0,4 bar: 0.50 % FSO	5		
option for p_N ≥ 0,4 bar: 0.25 % FSO	2		
customer	9		consult
Electrical connection			
male plug M12x1 (5-pin) / plastic	N01		
male plug M12x1 (8-pin) / plastic [3]	M50		
male plug M12x1 (5-pin) / metal	N11		
male and female plug ISO 4400 [2]	100		
male plug Binder series 723 (5-pin)	204		
customer	999		consult
Mechanical connection			
G1/2" with flush welded diaphragm (DIN 3852) for p_n ≥ 1 bar	Z00		
G3/4" with flush welded diaphragm (DIN 3852)	ZS0		
G1" with flush welded diaphragm (DIN 3852)	ZS1		
G1" DIN 3852 with rad. o-ring and flush diaphragm	ZS7		
G1/2" DIN 3852 with rad. o-ring and flush diaphragm (for p_n ≥ 1 bar)	Z61		
G 1" cone	KS1		
Clamp DN 25 / 1" (DIN 32676) / 3A [4]	C61		
Clamp DN 32 / 1 1/2" (DIN 32676) / 3A [4]	C62		
Clamp DN 50 / 2" (DIN 32676) / 3A [4]	C63		
Clamp 3/4" (DIN 32676) / 3A [4]	C69		
dairy pipe DN 25 (DIN 11851) [5]	M73		
dairy pipe DN 40 (DIN 11851) [5]	M75		
dairy pipe DN 50 (DIN 11851) [4,5]	M76		
Varivent® DN 40/50 / 3A [4]	P41		
customer	999		consult
Diaphragm			
stainless steel 1.4435 (316L)	1		
tantalum	T		consult
Hastelloy® C-276 (2.4819)	H		consult
customer	9		consult
Seal			
for Clamp, dairy pipe, Varivent®: without	0		
for inch thread: FKM	1		
FFKM	7		
customer	9		consult
Filling fluid			
silicone oil	1		
food compatible oil (FDA) / 3A	2		
customer	9		consult
Special version			
standard		000	
with cooling element up to 300°C / 3A		200	
customer		999	consult

[1] with IS version max. 1 contact is possible
[2] with connector ISO 4400 and output 2-wire version only max. 1 contact possible; with 3-wire version no contact possible
[3] 4 contacts and M12x1, 8-pin only possible in combination and together with 4 … 20 mA/3-wire; 0 … 10 V/3-wire on request
[4] possible nominal pressure ranges according to data sheet
[5] The cup nut for dairy pipe has to be mounted by production of pressure transmitter. The cup nut has to be ordered as separate position.
Varivent® is a brand name of GEA Tuchenhagen GmbH, Hastelloy® is a brand name of Haynes International Inc.

DS 201P

Electronic Pressure Switch

Pressure Port with Flush Welded Stainless Steel Diaphragm

accuracy according to IEC 60770:
0.5 % FSO

Nominal pressure

from 0 ... 60 bar up to 400 bar

Contacts

1, 2 or 4 independent PNP contacts, freely configurable

Analogue output

2-wire: 4 ... 20 mA
3-wire: 4 … 20 mA / 0 … 10 V
others on request

Special characteristics

- indication of measured values on a 4-digit LED display
- rotatable and configurable display module

Optional versions

- **IS-version**
  Ex ia = intrinsically safe for gases
- cooling element up to 300 °C
- customer specific versions

The electronic pressure switch DS 201P is the successful combination of

- intelligent pressure switch
- digital display

and is designed for universal applications in the mechanical engineering and other industries where a flush stainless steel diaphragm is necessary. This can be the case, for example, with higher viscous or slightly polluted fluids. For usage with higher media temperature optionally a cooling element up to 300 °C is available.

Preferred areas of use are

Plant and machine engineering

Food industry

Preferred used for

Viscous and pasty media

DS 201 P

Technical Data

Input pressure ranges					
Nominal pressure gauge/abs. [bar]	60	100	160	250	400
Overpressure [bar]	100	200	400	400	600
Burst pressure ≥ [bar]	120	250	500	500	650

Contact [1]	
Standard	1 PNP contact
Options	2 independent PNP contacts 4 independent PNP contacts (possible with M12x1, 8-pin for 4 ... 20 mA/3-wire; 0 ... 10 V/3-wire on request)
Max. switching current	4 ... 20 mA / 2- and 3-wire: contact rating 125 mA, short-circuit resistant; $V_{switch} = V_S - 2V$ 0 ... 10 V / 3-Leiter: contact rating 125 mA, short-circuit resistant
Accuracy of contacts[2]	≤ ± 0.5 % FSO
Repeatability	≤ ± 0.2 % FSO
Switching frequency	max. 10 Hz
Switching cycles	> 100 x 10^6
Delay time	0 ... 100 sec

[1] max. 1 contact for 2-wire current signal with plug ISO 4400 as well as 2-wire current signal with Ex-protection no contact possible with 3-wire in combination with plug ISO 4400
[2] accuracy according to IEC 60770 – limit point adjustment (non-linearity, hysteresis, repeatability)

Analogue output (optionally) / Supply	
2-wire current signal	4 ... 20 mA / V_S = 13 ... 36 V_{DC} permissible load: $R_{max} = [(V_S - V_{S\,min}) / 0.02\ A]\ \Omega$ response time: < 10 msec
2-wire current signal with Ex-protection	4 ... 20 mA / V_S = 15 ... 28 V_{DC} permissible load: $R_{max} = [(V_S - V_{S\,min}) / 0.02\ A]\ \Omega$ response time: < 10 msec
3-wire current signal	4 ... 20 mA / V_S = 19 ... 30 V_{DC} adjustable (turn-down of span max. 1:5) [3] permissible load: R_{max} = 500 Ω response time: < 0.5 sec
3-wire voltage signal	0 ... 10 V / V_S = 15 ... 36 V_{DC} permissible load: R_{min} = 10 kΩ response time: < 10 msec
Without analogue output	V_S = 15 ... 36 V_{DC}
Accuracy [2]	≤ ± 0.5 % FSO

[3] with turn-down of span the analogue signal is adjusted automatically to the new measuring range

Thermal error (offset and span) [4]	
Thermal error	≤ ± 0.2 % FSO / 10 K
In compensated range	0 ... 85°C

[4] an optional cooling element can influence thermal effects for offset and span depending on installation position and filling conditions

Permissible temperatures		
Filling fluid	silicone oil	food compatible oil
Medium [5]	-40 ... 125 °C	-10 ... 125 °C
Medium with cooling element [6]	overpressure: -40 ... 300 °C vacuum: -40 ... 150 °C	overpressure: -10 ... 250 °C vacuum: -10 ... 150 °C
Electronics / environment	-40 ... 85 °C	
Storage	-40 ... 100 °C	

[5] max. temperature of the medium for overpressure > 0 bar: 150 °C for 60 minutes with a max. environmental temperature of 50 °C
[6] max. temperature depends on the used sealing material, type of seal and installation

Electrical protection	
Short-circuit protection	permanent
Reverse polarity protection	no damage, but also no function
Electromagnetic compatibility	emission and immunity according to EN 61326

Mechanical stability		
Vibration	5 g RMS (25 ... 2000 Hz)	according to DIN EN 60068-2-6
Shock	100 g / 11 msec	according to DIN EN 60068-2-27

Filling fluids	
Standard	silicone oil
Optional	food compatible oil with FDA approval (Mobil SHC Cibus 32; Category Code: H1; NSF Registration No.: 141500) others on request

Materials	
Pressure port / housing	stainless steel 1.4404 (316 L)
Display housing	PA 6.6, Polycarbonate
Seals	standard: FKM (recommended for medium temperatures ≤ 200 °C) option: FFKM [7] (recommended for medium temperatures < 260 °C) others on request
Diaphragm	stainless steel 1.4435
Media wetted parts	pressure port, seals, diaphragm

[7] for pressure ranges p_N ≤ 100 bar

Explosion protection (only for 4 … 20 mA / 2-wire)	
Approval AX14-DS 201P	IBExU06ATEX1050 X zone 1: II 2G Ex ia IIC T4 Gb
Safety technical maximum values	U_i = 28 V, I_i = 93 mA, P_i = 660 mW, C ≈ 0 nF, L_i ≈ 0 µH
Max. switching current [8]	70 mA
Max. temperatures for environment	-25 ... 70 °C
Connecting cables (by factory)	cable capacitance: signal line/shield also signal line/signal line: 100 pF/m cable inductance: signal line/shield also signal line/signal line: 1 µH/m
[8] the real switching current in the application depends on the power supply unit	
Miscellaneous	
Display	4-digit, red 7-segment-LED display digit height 7 mm range of indication -1999 ... +9999; accuracy 0.1 % ± 1 digit digital damping 0.3 … 30 sec (programmable) measured value update 0.0 … 10 sec (programmable)
Current consumption (without contacts)	2-wire signal output current: max. 25 mA 3-wire signal output current: approx. 45 mA + signal current 3-wire signal output voltage: approx. 45 mA
Ingress protection	IP 65
Installation position	any (standard calibration in a vertical position with the pressure port connection down)
Weight	min. 200 g (depending on mechanical connection)
Operational life	100 million load cycles
CE-conformity	EMC Directive: 2014/30/EU Pressure Equipment Directive: 2014/68/EU (module A) [9]
ATEX Directive	2014/34/EU
[9] This directive is only valid for devices with maximum permissible overpressure > 200 bar.	

Wiring diagrams

2-wire-system (current)

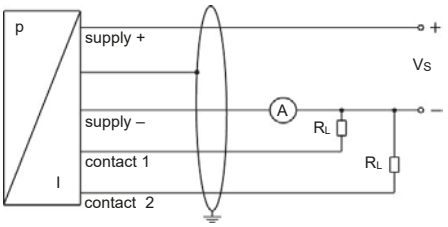

3-wire-system (current/voltage)

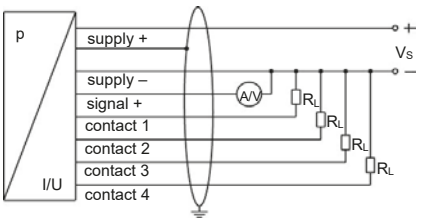

Pin configuration

Electrical connection	M12x1 plastic (5-pin)	M12x1 metal (5-pin)	M12x1 plastic (8-pin)	ISO 4400	Binder series 723 (5-pin)
Supply +	1	1	1	1	1
Supply –	3	3	3	2	3
Signal + (only 3-wire)	2	2	2	3	2
Contact 1	4	4	4	3	4
Contact 2	5	5	5	-	5
Contact 3	-	-	6	-	-
Contact 4	-	-	7	-	-
Shield	via pressure port	plug housing/ pressure port	via pressure port	ground contact	plug housing/ pressure port

DS 201 P

Technical Data

Electrical connections (dimensions mm / in)

M12x1 plastic
(5-pin)

M12x1 metal
(5-pin)

M12x1 plastic
(8-pin)

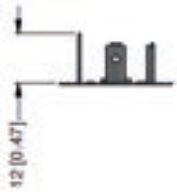

ISO 4400

Binder series 723
(5-pin)

Dimensions (mm / in)

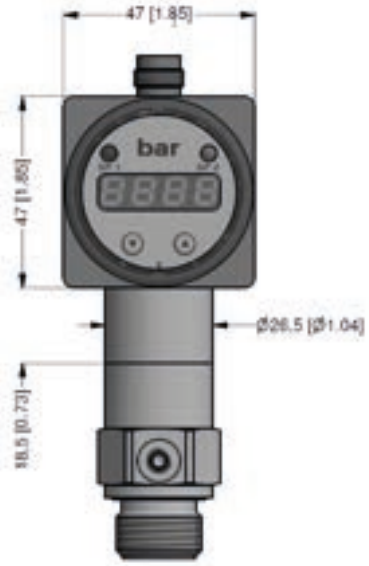

rotatability of display module

Mechanical connection **(dimensions mm / in)**

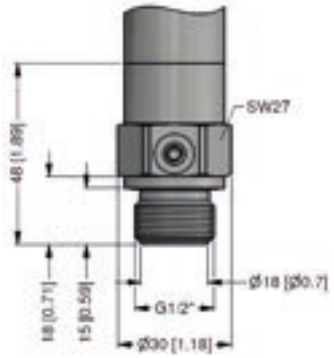

G1/2" flush DIN 3852

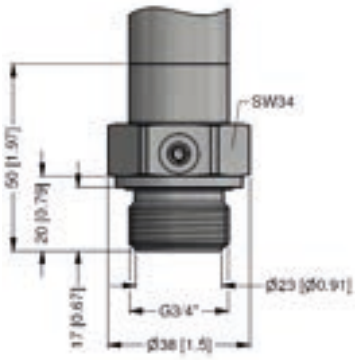

G3/4" flush DIN 3852

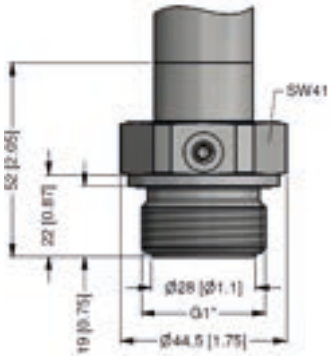

G1" flush DIN 3852

⇨ metric threads and other versions on request

Cooling element up to 300 °C [6] (optionally)

possible for p_N ≤ 160 bar

[6] *max. temperature depends on the used sealing material, type of seal and installation*

DS 201 P

Ordering Code

Ordering code DS 201P

DS 201P □□□-□□□□-□-□-□-□□□-□□□-□-□-□-□□□

Pressure																										
gauge	7	8	7																							
absolute	7	8	8																							
Input [bar]																										
60				6	0	0	2																			
100				1	0	0	3																			
160				1	6	0	3																			
250				2	5	0	3																			
400				4	0	0	3																			
customer				9	9	9	9																			consult
Analogue output																										
without								0																		
4 … 20 mA / 2-wire								1																		
0 … 10 V / 3-wire								3																		
4 … 20 mA / 3-wire, adjustable								7																		
intrinsic safety 4 … 20 mA / 2-wire [1]								E																		
customer								9																		consult
Contact																										
1 contact [1, 2]									1																	
2 contacts [1, 2]									2																	
4 contacts									4																	consult
Accuracy																										
0.5 % FSO										5																
customer										9																consult
Electrical connection																										
male plug M12x1 (5-pin) / plastic version											N	0	1													
male plug M12x1 (8-pin) / plastic version [3]											M	5	0													
male plug M12x1 (5-pin) / metal version											N	1	1													
male and female plug ISO 4400 [2]											1	0	0													
male plug Binder series 723 (5-pin)											2	0	4													
customer											9	9	9													consult
Mechanical connection																										
G1/2" DIN 3852 with flush diaphragm														Z	0	0										
G3/4" DIN 3852 with flush diaphragm														Z	S	0										
G1" DIN 3852 with flush diaphragm														Z	S	1										
customer														9	9	9										consult
Diaphragm																										
stainless steel 1.4435 (316L)																	1									
customer																	9									
Seal																										
FKM																		1								
FFKM [4]																		7								
customer																		9								consult
Filling fluid																										
silicone oil																			1							
food compatible oil																			2							
customer																			9							consult
Special version																										
standard																					0	0	0			
with cooling element up to 300°C [5]																					2	0	0			
customer																					9	9	9			consult

[1] with IS version max. 1 contact is possible
[2] with connector ISO 4400 and output 2-wire version only max. 1 contact possible; with 3-wire version no contact possible
[3] 4 contacts and M12x1, 8-pin only possible in combination and together with 4 ... 20 mA/3-wire; 0 ... 10 V/3-wire on request
[4] possible for nominal pressure ranges $p_N \leq 100$ bar
[5] cooling element up to 300°C not possible for pressure range $p_N > 160$ bar

DS 350P

Electronic Pressure Switch with IO-Link Interface

Pressure Ports and Process Connections with Flush Welded Stainless Steel Diaphragm

Stainless Steel Sensor

accuracy according to IEC 60770:
standard: 0.5 % FSO / 0.35 % FSO
option: 0.25 % FSO

Nominal pressure

from 0 ... 100 mbar up to 0 ... 40 bar

Digital output signal

IO-Link according to specification V 1.1

smart sensor profile

data transfer 38.4 kbit/sec

Switchable output signal

PNP / NPN / 4 … 20 mA / 0 … 10 V

Special characteristics

- indication of measured values on a 4-digit LED display
- rotatable and configurable display module
- parameter settings via IO-Link or menu (VDMA-conform)
- additional information via IO-Link accessible

Optional versions

- different mechanical connections
- cooling element for medium temperatures up to 300 °C
- customer specific versions

The DS 350P is an electronic pressure switch which has been designed for food industry and pharmacy. In addition to a large number of flush process connections, a multi-rotatable display module as standard is offered. This makes it easier for the user to read / operate it also in unusual display positions due to installation conditions on-site.

The integrated IO-Link interface provides process data, diagnostics, and status messages as well as other features, which are helpful for service and maintenance.

The switchability of the output signal as switching signal or analogue signal (mA / V) increases flexibility and integration in different applications.

Preferred areas of use are

Food industry

Pharmacy

Material and test certificates

- Inspection certificate 3.1 according to EN 10204
- Test report 2.2 according to EN 10204

DS 350 P

Technical Data

Input pressure range [1]															
Nominal pressure gauge	[bar]	0.10	0.16	0.25	0.40	0.60	1	1.6	2.5	4	6	10	16	25	40
Nominal pressure absolute	[bar]	-	-	-	0.40	0.60	1	1.6	2.5	4	6	10	16	25	40
Overpressure (static)	[bar]	0.5	1	1	2	5	5	10	10	20	40	40	80	80	105
Burst pressure ≥	[bar]	1.5	1.5	1.5	3	7.5	7.5	15	15	25	50	50	120	120	210
Vacuum resistance	[bar]	p_N ≥ 1 bar: unlimited vacuum resistance									p_N < 1 bar: on request				

[1] consider the pressure resistance of fitting and clamps

Supply	
Voltage supply	V_S = 18 ... 30 V_{DC}
Output signals	
Output signal 1	IO-Link / SIO (PNP / NPN) switchable
Output signal 2	4 … 20 mA / 3-wire or 0 … 10 V / 3-wire or PNP / NPN switchable
Signal characteristics switching signal	
Accuracy of switching points [2]	≤ ± 0.35 % FSO
Repeatability	≤ ± 0.1 % FSO
Max switching current	150 mA
Switching frequency	max. 170 Hz
Delay time	0.0 … 50.0 sec
Response time	< 12 msec
Signal characteristics analogue signal	
Accuracy [2]	standard: nominal pressure < 0.4 bar: ≤ ± 0.50 % FSO nominal pressure ≥ 0.4 bar: ≤ ± 0.35 % FSO option: nominal pressure ≥ 0.4 bar ≤ ± 0.25 % FSO
Long term stability	≤ ± 0.3 % FSO / year at reference conditions
Load (4 … 20 mA / 3-wire)	R_{max} = 330 Ω
Load (0 … 10 V / 3-wire)	R_{min} = 10 kΩ
Influence effects	supply: 0.05% FSO load: ≤ 0.1 % FSO
Adjustability	offset: ± 5 % span: -10 %

[2] accuracy according to IEC 60770 – limit point adjustment (non-linearity, hysteresis, repeatability)

Thermal effects (offset and span) [3]			
Nominal pressure p_N	[bar]	< 0.40	≥ 0.40
Tolerance band	[%FSO]	≤ ± 1.5	≤ ± 0.75
in compensated range	[°C]	0 ... 50	-20 ... 85

[3] an optional cooling element can influence thermal effects for offset and span depending on installation position and filling conditions

Permissible temperatures		
Filling fluid	silicone oil	food compatible oil
Medium [4]	-40 ... 125 °C	-10 ... 125 °C
Medium with cooling element [5]	overpressure: -40 ... 300 °C vacuum: -40 ... 150 °C	overpressure: -10 ... 250 °C vacuum: -10 ... 150 °C
Electronics / environment / storage	-40 ... 85 °C	

[4] max. temperature of the medium for overpressure > 0 bar: 150 °C for 60 minutes with a max. environmental temperature of 50 °C
[5] max. temperature depends on the used sealing material, type of seal and installation

Electrical protection	
Short-circuit protection	permanent
Reverse polarity protection	no damage, but also no function
Electromagnetic compatibility	emission and immunity according to EN 61326
IO-Link	
Interface	IO-Link 1.1; Slave
Data transfer	38.4 kbit/sec (COM 2)
Mode	SIO / IO-Link
Standard	IEC 61131-2, IEC 61131-9
Mechanical stability	
Vibration	10 g RMS (25 … 2000 Hz) according to DIN EN 60068-2-6
Shock	100 g / 1 msec according to DIN EN 60068-2-27
Filling fluids	
Standard	silicone oil
Optional	food compatible oil according to 21CFR178.3570 (Mobil SHC Cibus 32; Category Code: H1; NSF Registration No.: 141500) others on request

Materials	
Display housing	PA 6.6
Housing	stainless steel 1.4404 (316 L)
Pressure port	stainless steel 1.4404 (316 L) Clamp, Varivent®, G1" cone: stainless steel 1.4435 (316 L)
Diaphragm	stainless steel 1.4435 (316 L)
Seal	standard: FKM (recommended for medium temperatures ≤ 200 °C) option: EPDM (recommended for medium temperatures ≤ 140 °C) others on request G1" cone, Clamp, Varivent®: without
Media wetted parts	pressure port, seal, diaphragm
Miscellaneous	
EHEDG certificate Type EL Class I	EHEDG conformity is only ensured in combination with an approved seal. This is e.g. for - Clamp (C61, C63): T-ring-seal from Combifit International B.V. - Varivent® (P41): EPDM-O-ring which is FDA-listed
Display	4-digit, 7-segment-LED display on black base body, white, blue foil, digit height 7 mm, range of indication -1999 ... +9999, visible range 22.5 x 10.5 mm 4 LEDs for unit switching (bar, mbar, PSI, MPa) LED status display for IO-Link and contacts
Operation	2 buttons
Featured	functions according to VDMA 24574-1
Turn-on time	110 msec
Surface roughness	pressure port R_a < 0.8 µm (media wetted parts) diaphragm R_a < 0.15 µm weld seam R_a < 0.8 µm
Weight	approx. 250 g
Operational life	100 million load cycles
Current consumption	< 50 mA (without contacts)
Ingress protection	IP 67
Installation position	any [6]
CE-conformity	EMC Directive: 2014/30/EU

[6] *The pressure switch is calibrated in a vertical position with the pressure connection down. If this position is changed on installation there can be slight deviations in the zero point for pressure ranges p_N ≤ 1 bar.*

Wiring diagrams

3-wire-system / configuration of analogue output:

signal 1: IO-Link or contact
signal 2: analogue output

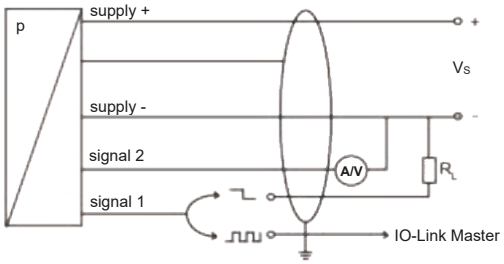

3-wire-system / configuration of contact:

signal 1: IO-Link or contact
signal 2: contact

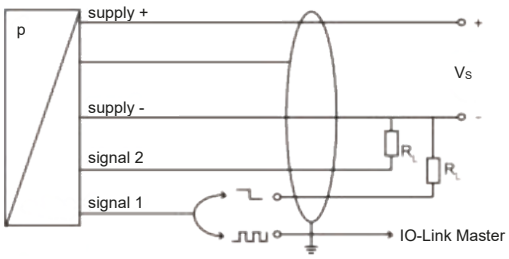

Electrical connection

Pin configuration	Description	M12x1 (4-pin), metal
Supply +	supply	1
Supply –	supply	3
Output signal 1	IO-Link / SIO (PNP / NPN)	4
Output signal 2	4 … 20 mA – 3-wire / 0 …10 V – 3-wire (PNP / NPN)	2
Shield	shielding	plug housing

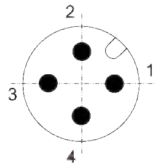

DS 350 P

Technical Data

Dimensions (mm / in)

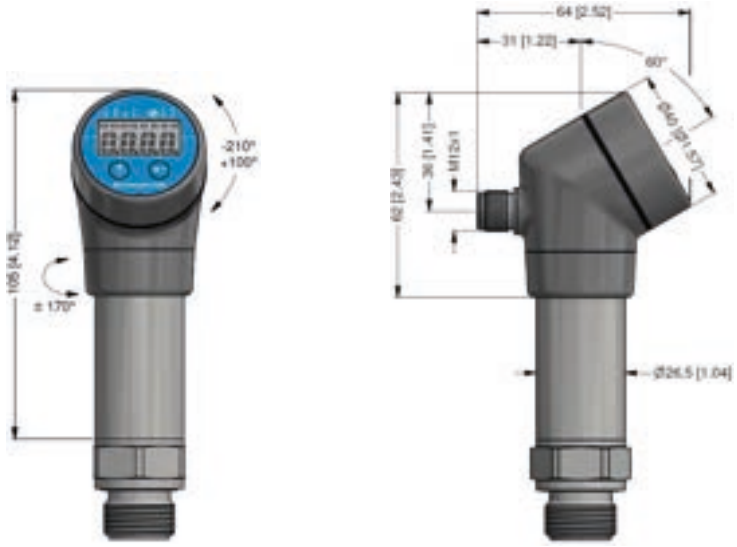

Mechanical connection (dimensions mm / in)

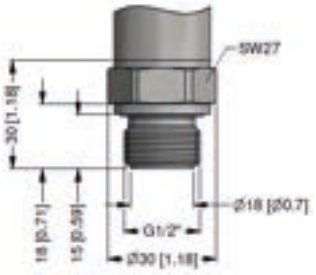

G1/2" DIN 3852 flush
$p_N \geq 1$ bar

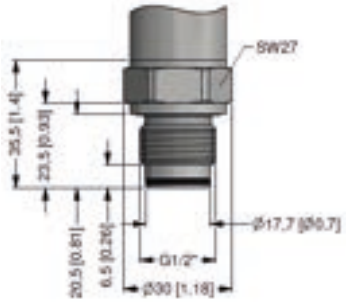

G1/2" DIN 3852 with 2x o-ring
$p_N \geq 1$ bar

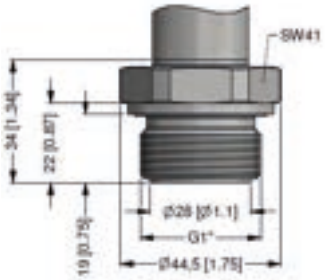

G1" DIN 3852
flush

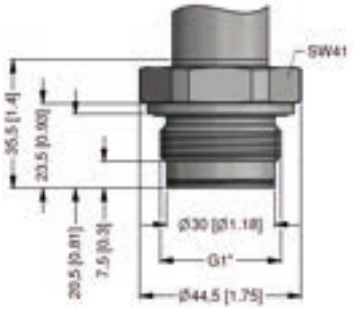

G1" DIN 3852 with 2x o-ring
$p_N \leq 2$ bar

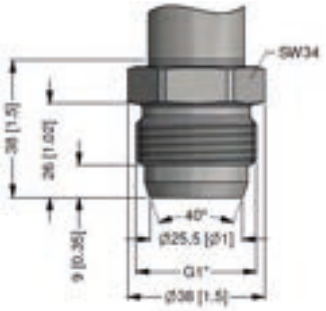

G1" cone

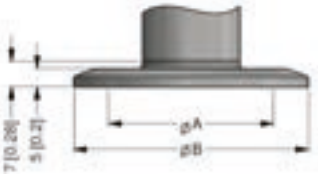

dimensions in mm / in		
size	DN 25 / 1"	DN 50 / 2"
A	23,0 [0.91]	45 [1.77]
B	50,5 [1.99]	64 [2.52]

Clamp (DIN 32676)
$p_N \leq 16$ bar

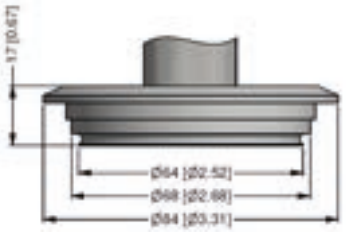

Varivent® DN 40/50
$p_N \leq 25$ bar

cooling element up to 300 °C [5]

⇨ **metric threads and other versions on request**

[5] *max. temperature depends on the used sealing material, type of seal and installation*

Ordering code DS 350P

DS 350P □□□-□□□□-□□-□-□□□-□□□-□-□-□-□□□

Pressure																													
gauge		7	E	A																									
absolute [1]		7	E	C																									
Input	**[bar]**																												
0.10 [1]					1	0	0	0																					
0.16 [1]					1	6	0	0																					
0.25 [1]					2	5	0	0																					
0.40					4	0	0	0																					
0.60					6	0	0	0																					
1.0					1	0	0	1																					
1.6					1	6	0	1																					
2.5					2	5	0	1																					
4.0					4	0	0	1																					
6.0					6	0	0	1																					
10					1	0	0	2																					
16					1	6	0	2																					
25					2	5	0	2																					
40					4	0	0	2																					
customer					9	9	9	9																					consult
Output																													
IO-Link + PNP/NPN + analogue output [2]									I	X																			
Accuracy																													
standard for $p_N \leq 0.4$ bar	0.50% FSO										5																		
standard for $p_N > 0.4$ bar	0.35% FSO										3																		
option for $p_N \geq 0.4$ bar	0.25% FSO										2																		
customer											9																		consult
Electrical connection																													
male plug M12x1 (4-pin) / metal												M	1	B															
customer												9	9	9															consult
Mechanical connection																													
G1/2" DIN 3852 flush ($p_N \geq 1$ bar)															Z	0	0												
G1/2" DIN 3852 with 2x o-ring ($p_N \geq 1$ bar)															Z	6	1												
G1" DIN 3852 flush															Z	S	1												
G1" DIN3852 with 2x o-ring ($p_N \leq 2$ bar)															Z	S	7												
G1" cone															K	S	1												
Clamp DN 25 DIN 32676 ($p_N \leq 16$ bar)															C	6	1												
Clamp DN 50 DIN 32676 ($p_N \leq 16$ bar)															C	6	3												
Varivent® DN 40/50 ($p_N \leq 25$ bar)															P	4	1												consult
customer															9	9	9												consult
Diaphragm																													
stainless steel 1.4435 (316L)																		1											
customer																		9											
Seal																													
for Clamp, cone, Varivent®:	without																		0										
	FKM																		1										
	EPDM																		3										
customer																			9										consult
Filling fluids																													
silicone oil																					1								
food compatible oil (FDA)																					2								
customer																					9								
Special version																													
standard																							0	0	0				
cooling element up to 300 °C																							2	0	0				
customer																							9	9	9				consult

[1] absolute pressure possible from 0.4 bar
[2] contact PNP/NPN switchable; analogue output 0 ... 10 V / 4 … 20 mA switchable
Varivent® is a brand name of GEA Tuchenhagen GmbH

DS 400P

Intelligent Electronic Pressure Switch Stainless Steel

Pressure Ports and Process Connections with Flush Welded Stainless Steel Diaphragm

accuracy according to IEC 60770:
standard: 0.35 % FSO
option: 0.25 % FSO

Nominal pressure

from 0 ... 100 mbar up to 0 ... 40 bar

Contacts

1 or 2 independent PNP contacts,
freely configurable

Analogue output

2-wire: 4 ... 20 mA
3-wire: 4 … 20 mA
others on request

Special characteristics

- indication of measured values on a 4-digit LED display
- rotable and configurable display module
- configurable contacts (switch on / switch off points, hysteresis/ window mode, switch on / switch off delay)
- hygienical version

Optional versions

- **IS-version**
  Ex ia = intrinsically safe
  for gases and dusts
- customer specific versions

The electronic pressure switch DS 400P is the successful combination of

- intelligent pressure switch
- digital display

and has been developed for process industry; especially for food industry and pharmacy.

As standard the DS 400P offers a PNP contact and a rotable display module with 4-digit LED display.

Optional versions like e.g. an intrinsically safe version, max. two contacts and an analogue output complete the profile.

Preferred areas of use are

Food industry

Pharmacy

Material and test certificates

- Inspection certificate 3.1 according to EN 10204
- Test report 2.2 according to EN 10204

Input pressure range [1]															
Nominal pressure gauge [bar]	-1 ... 0	0.1	0.16	0.25	0.4	0.6	1	1.6	2.5	4	6	10	16	25	40
Nominal pressure absolute [bar]	-	-	-	-	0.4	0.6	1	1.6	2.5	4	6	10	16	25	40
Overpressure [bar]	5	0.5	1	1	2	5	5	10	10	20	40	40	80	80	105
Burst pressure ≥ [bar]	7.5	1.5	1.5	1.5	3	7.5	7.5	15	15	25	50	50	120	120	210
Vacuum resistance	p_N ≥ 1 bar: unlimited vacuum resistance								p_N < 1 bar: on request						

[1] consider the pressure resistance of fitting and clamps

Contact [2]	
Number, type	standard: 1 PNP contact option: 2 independent PNP contacts
Max. switching current	contact rating 125 mA, short-circuit resistant; $V_{switch} = V_S - 2V$
Accuracy of contacts [3]	standard: nominal pressure < 0.4 bar: ≤ ± 0.5 % FSO / nominal pressure ≥ 0.4 bar: ≤ ± 0.35 % FSO option: nominal pressure ≥ 0.4 bar: ≤ ± 0.25 % FSO
Repeatability	≤ ± 0.1 % FSO
Switching frequency	2-wire: max. 10 Hz / 3-wire: 50 Hz
Switching cycles	> 100 x 10^6
Delay time	0 ... 100 sec

[2] with IS-protection max. 1 contact possible

Analogue output (optionally) / Supply	
2-wire current signal	4 ... 20 mA / V_S = 13 ... 36 V_{DC} permissible load: $R_{max} = [(V_S - V_{S\,min}) / 0.02\ A]\ \Omega$ response time: < 10 msec
2-wire current signal with IS-protection	4 ... 20 mA / V_S = 15 ... 28 V_{DC} permissible load: $R_{max} = [(V_S - V_{S\,min}) / 0.02\ A]\ \Omega$ response time: < 10 msec
3-wire current signal	4 ... 20 mA / V_S = 24 V_{DC} ± 10 % adjustable (turn-down of span 1:5) [4] permissible load: R_{max} = 500 Ω response time: < 30 msec
Without analogue output	V_S = 15 ... 36 V_{DC}
Accuracy [3]	standard: nominal pressure < 0.4 bar: ≤ ± 0.5 % FSO / nominal pressure ≥ 0.4 bar: ≤ ± 0.35 % FSO option: nominal pressure ≥ 0.4 bar: ≤ ± 0.25 % FSO

[3] accuracy according to IEC 60770 – limit point adjustment (non-linearity, hysteresis, repeatability)
[4] with turn-down of span the analogue signal is adjusted automatically to the new measuring range

Thermal errors (offset and span) [5]			
Nominal pressure p_N [bar]	-1 … 0	< 0.40	≥ 0.40
Tolerance band [% FSO]	≤ ± 0.75	≤ ± 1.5	≤ ± 0.75
In compensated range [°C]	-20 ... 85	0 ... 50	-20 ... 85

[5] an optional cooling element can influence thermal effects for offset and span depending on installation position and filling conditions

Permissible temperatures		
Filling fluid	silicone oil	food compatible oil
Medium [6]	-40 ... 125 °C	-10 ... 125 °C
Medium with cooling element [7]	overpressure: -40 ... 300 °C vacuum: -40 ... 150 °C [8]	overpressure: -10 ... 250 °C vacuum: -10 ... 150 °C [8]
Electronics / environment	-40 ... 85 °C	
Storage	-40 ... 100 °C	

[6] max. temperature of the medium for overpressure > 0 bar: 150 °C for 60 minutes with a max. environmental temperature of 50 °C
[7] max. temperature depends on the used sealing material, type of seal and installation
[8] also for $p_{abs} \leq 1$ bar

Electrical protection	
Short-circuit protection	permanent
Reverse polarity protection	no damage, but also no function
Electromagnetic compatibility	emission and immunity according to EN 61326

Mechanical stability		
Vibration (DIN EN 60068-2-6)	G 1/2": 20 g RMS (25 ... 2000 Hz)	others except G 1/2": 10 g RMS (25 … 2000 Hz)
Shock (DIN EN 60068-2-27)	G 1/2": 500 g / 1 msec	others except G 1/2": 100 g / 1 msec

Filling fluids	
Standard	silicone oil
Optional	food compatible oil according to 21CFR178.3570 (Mobil SHC Cibus 32; Category Code: H1; NSF Registration No.: 141500) others on request

Materials		
Pressure port	inch thread: G1" cone, Clamp, diary pipe, Varivent®:	stainless steel 1.4404 (316 L) stainless steel 1.4435 (316 L)
Diaphragm	stainless steel 1.4435 (316L)	
Housing / cap	stainless steel 1.4301 (304)	
Viewing glass	laminated safety glass	
Seals	standard: FKM (recommended for medium temperatures ≤ 200 °C) option: FFKM (recommended for medium temperatures < 260 °C) others on request Clamp, dairy pipe, Varivent®: without	
Media wetted parts	pressure port, seals, diaphragm	

Explosion protection (only for 4 … 20 mA / 2-wire)	
Approval AX14-DS 400P	IBExU 06 ATEX 1050 X zone 0: II 1G Ex ia IIC T4 Ga zone 20: II 1D Ex ia IIIC T135 °C Da
Safety technical maximum values	U_i = 28 V, I_i = 93 mA, P_i = 660 mW, C ≈ 0 nF, L_i ≈ 0 µH
Max. switching current [9]	70 mA
Permissible temperatures for environment	in zone 0: -20 ... 60 °C with p_{atm} 0.8 bar up to 1.1 bar in zone 1 or higher: -25 ... 70 °C

[9] *the real switching current in the application depends on the power supply unit*

Miscellaneous	
EHEDG certificate Type EL Class I	EHEDG conformity is only ensured in combination with an approved seal. This is e.g. for - Clamp (C61, C62, C63): T-ring-seal from Combifit International B.V. - Varivent® (P41): EPDM-O-ring which is FDA-listed - dairy pipe (M73, M75, M76): ASEPTO-STAR k-flex upgrade seal by Kieselmann GmbH
Display	4-digit, 7-segment-LED display, visible range 37.2 x 11 mm; digit height 10 mm, range of indication -1999 ... +9999; accuracy 0.1% ± 1 digit; digital damping 0.3 … 30 sec (programmable); measured value update 0.0 … 10 sec (programmable)
Current consumption (without contacts)	2-wire signal output current: max. 25 mA 3-wire signal output current: approx. 30 mA + signal current
Ingress protection	IP 67
Installation position	any (standard calibration in a vertical position with the pressure port connection down; differing installation position for p_N ≤ 4 bar have to be specified in the order)
Surface roughness	pressure port R_a < 0.8 µm (media wetted parts) diaphragm R_a < 0.15 µm weld seam R_a < 0.8 µm
Weight	min. 500 g (depending on mechanical connection)
Operational life	100 million load cycles
CE-conformity	EMC Directive: 2014/30/EU
ATEX Directive	2014/34/EU

Wiring diagrams

2-wire-system (current)

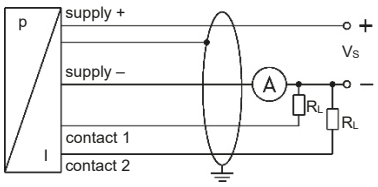

3-wire-system (current)

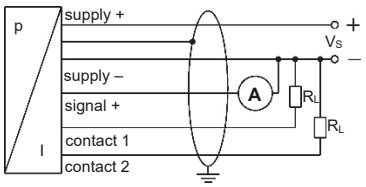

Pin configuration

Electrical connection	M12x1 / metal (5-pin)
Supply +	1
Supply –	3
Signal + (only 3-wire)	2
Contact 1	4
Contact 2	5
Shield	plug housing / pressure port

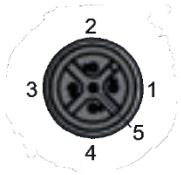

Designs [10]

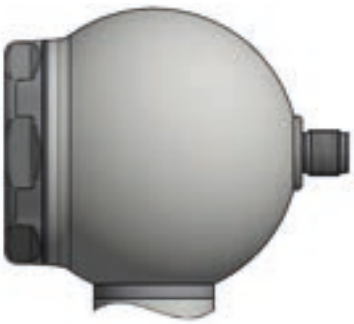

side display

45° display (on request)

[10] *all designs in horizontal rotatable housing as standard*

Dimensions (mm / in)

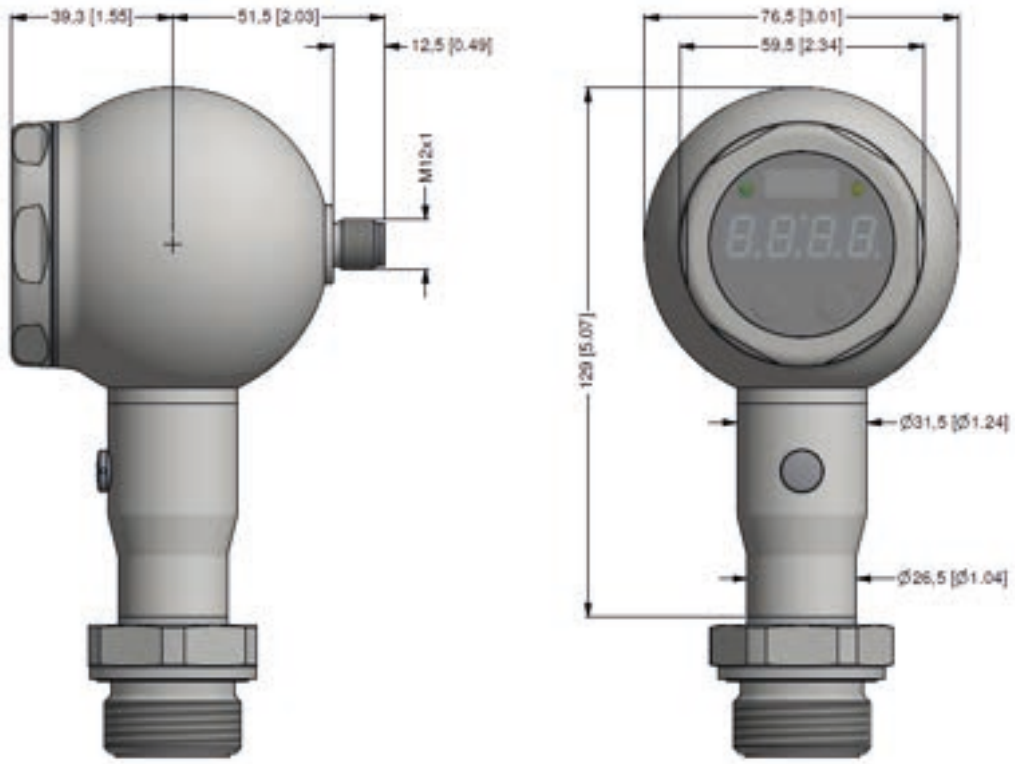

Cooling element up to 300 °C [7] **(optionally)**

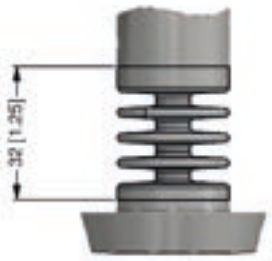

[7] *max. temperature depends on the used sealing material, type of seal and installation*

Mechanical connections (dimensions mm / in)

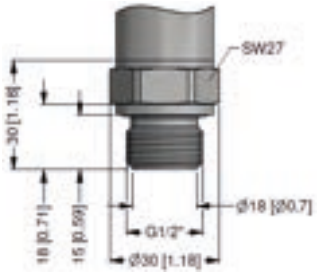

G1/2" flush DIN 3852
$p_N \geq 1$ bar

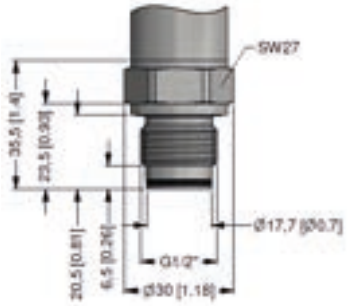

G1/2" flush with radial o-ring
$p_N \geq 1$ bar

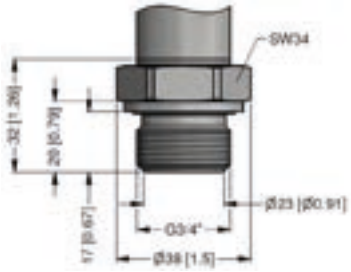

G3/4" flush DIN 3852

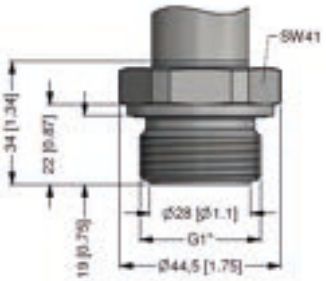

G1" flush DIN 3852

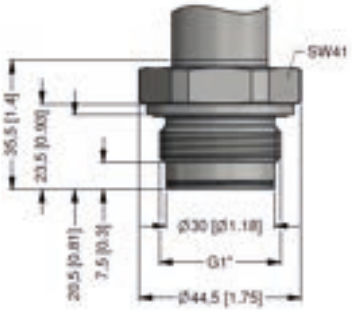

G1" flush with radial o-ring

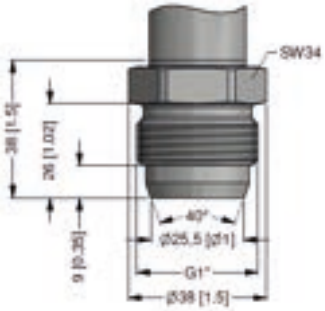

G1" cone

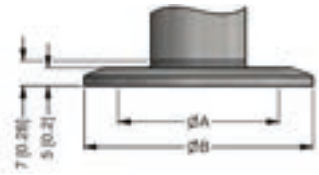

dimensions in mm [in]			
size	DN 25	DN 32	DN 50
A	23.0 [0.91]	23.0 [0.91]	45 [1.77]
B	50.5 [1.99]	50.5 [1.99]	64 [2.52]
p_N [bar]	0.25 ... 16	≤ 16	≤ 16

Clamp (DIN 32676)

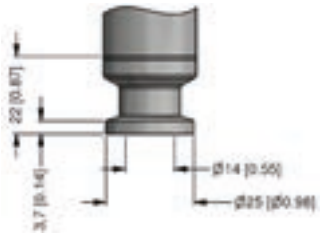

Clamp 3/4″ (DIN 32676)
4 bar ≤ p_N ≤ 8 bar

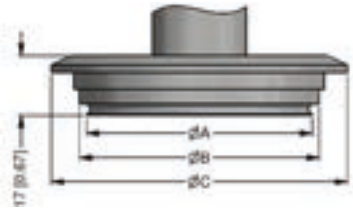

dimensions in mm [in]	
size	DN 40/50
A	64 [2.52]
B	68 [2.68]
C	84 [3.31]

Varivent® DN 40/50
$p_N \leq 25$ bar

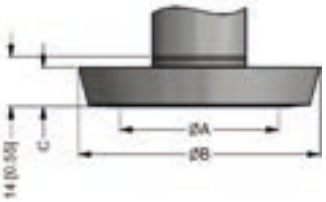

dimensions in mm [in]			
size	DN 25	DN 40	DN 50
A	23 [0.91]	32 [1.26]	45 [1.77]
B	44 [1.73]	56 [1.20]	68,5 [2.70]
C	10 [0.39]	10 [0.39]	11 [0.43]
p_N [bar]	≤ 40	≤ 40	≤ 25

dairy pipe (DIN 11851)

⇨ **metric threads and other versions on request**

DS 400 P

Ordering Code

Ordering code DS 400P

DS 400P □□□-□□□□-□□-□-□-□-□□□-□□□-□-□-□-□-□□□

Pressure																																				
gauge	7	A	5																																	
absolute [1]	7	A	6																																	
Input	**[bar]**																																			
0.10				1	0	0	0																													
0.16				1	6	0	0																													
0.25				2	5	0	0																													
0.40				4	0	0	0																													
0.60				6	0	0	0																													
1.0				1	0	0	1																													
1.6				1	6	0	1																													
2.5				2	5	0	1																													
4.0				4	0	0	1																													
6.0				6	0	0	1																													
10				1	0	0	2																													
16				1	6	0	2																													
25				2	5	0	2																													
40				4	0	0	2																													
-1 … 0				X	1	0	2																													
customer				9	9	9	9																													consult
Design																																				
side display								K	H																											
45° display								K	4																											consult
Analogue output																																				
without										0																										
4 … 20 mA / 2-wire										1																										
4 … 20 mA / 3-wire, adjustable										7J																										
intrinsic safety 4 … 20 mA / 2-wire [2]										E																										
customer										9																										consult
Contact																																				
1 contact												1																								
2 contacts [2]												2																								
Accuracy																																				
standard for p_N ≥ 0,4 bar: 0.35 % FSO													3																							
standard for p_N < 0,4 bar: 0.50 % FSO													5																							
option for p_N ≥ 0,4 bar: 0.25 % FSO													2																							
customer													9																							consult
Electrical connection																N	1	1																		
male plug M12x1 (5-pin) / metal																9	9	9																		
customer																																				consult
Mechanical connection																																				
G1/2" with flush welded diaphragm (DIN 3852) [3]																			Z	0	0															
G3/4" with flush welded diaphragm (DIN 3852)																			Z	S	0															
G1" with flush welded diaphragm (DIN 3852)																			Z	S	1															
G1" DIN 3852 with rad. o-ring and flush diaphragm																			Z	S	7															
G1/2" DIN 3852 with rad. o-ring and flush diaphragm [3]																			Z	6	1															
G 1" cone																			K	S	1															
Clamp DN 25 (DIN 32676) / 3A [4]																			C	6	1															
Clamp DN 32 (DIN 32676) / 3A [4]																			C	6	2															
Clamp DN 50 (DIN 32676) / 3A [4]																			C	6	3															
Clamp 3/4" (DIN 32676) / 3A [4]																			C	6	9															
dairy pipe DN 25 (DIN 11851) [4,5]																			M	7	3															
dairy pipe DN 40 (DIN 11851) [4,5]																			M	7	5															
dairy pipe DN 50 (DIN 11851) [4,5]																			M	7	6															
Varivent® DN 40/50 / 3A [4]																			P	4	1															
customer																			9	9	9															consult
Diaphragm																																				
stainless steel 1.4435 (316L)																						1														
customer																						9														consult
Seal																																				
for clamp, dairy pipe, Varivent®: none																							0													
for inch thread: FKM																							1													
FFKM																							7													consult
customer																							9													consult
Filling fluid																																				
silicone oil																								1												
food compatible oil (FDA) / 3A																								2												
customer																								9												consult
Special version																																				
standard																									0	0	0									
with cooling element up to 300°C / 3A																									2	0	0									
customer																									9	9	9									consult

[1] absolute pressure possible from 1 bar
[2] with IS version max. 1 contact is possible
[3] only possible for nominal pressure ranges p_N ≥ 1 bar
[4] possible nominal pressure ranges according to data sheet
[5] The cup nut for dairy pipe has to be mounted by production of pressure transmitter. The cup nut has to be ordered as separate position.
Varivent® is a brand name of GEA Tuchenhagen GmbH

DS 217

Pressure Switch with welded Stainless Steel Sensor

Characteristics:

- accuracy according to IEC 60770: 0.5 % FSO
- nominal pressure ranges from 0 … 6 bar up to 0 … 600 bar
- 1 analogue output and up to 2 contacts
- display and housing rotatable
- suitable for oxygen applications

Technical Data

Input pressure range												
Nominal pressure gauge	[bar]	6	10	16	25	40	60	100	160	250	400	600
Overpressure (static)	[bar]	12	20	32	50	80	120	200	320	500	800	1 200
Burst pressure ≥	[bar]	30	50	80	125	200	300	500	800	1 400	2 000	3 000
Vacuum resistance		unlimited										
Contact												
Number / type		standard: 1 PNP contact optionally: max. 2 independent PNP contact; 1 analogue output										
Switching current		standard: contact rating max. 125 mA, short-circuit resistant										
Accuracy of switching points [1]		≤ ± 1.5 % FSO										
Repeatability		≤ ± 0.5 % FSO										
Switching frequency		max. 10 Hz										
Switching cycles		> 100 x 10^6										
Delay time		0 ... 100 sec										
Analogue output (optionally) / Supply												
3-wire current signal		4 ... 20 mA / V_S = 24 V_{DC} ± 10 %										
Accuracy [1]		≤ ± 0.5 % FSO										
Permissible load		R_{max} = 500 Ω										
Influence effects		supply: 0.05 % FSO / 10 V						load: 0.05 % FSO / kΩ				
Measuring rate		10 Hz										
[1] accuracy according to IEC 60770 – limit point adjustment (non-linearity, hysteresis, repeatability)												
Thermal effects (offset and span)												
Thermal error		≤ ± 0.5 % FSO / 10 K						in compensated range -25 ... 85 °C				
Permissible temperatures												
Medium		-25 ... 125 °C										
Electronics / environment		-25 ... 85 °C										
Storage		-40 ... 85 °C										
Electrical protection												
Short-circuit protection		permanent										
Reverse polarity protection		no damage, but also no function										
Electromagnetic compatibility		emission and immunity according to EN 61326										

Mechanical stability		
Vibration	10 g (25 … 2000 Hz)	according to DIN EN 60068-2-6
Shock	500 g / 1 msec	according to DIN EN 60068-2-27
Materials		
Pressure port / housing	stainless steel 1.4571 (316 Ti) / stainless steel 1.4301 (304)	
Display housing	PA 6.6, polycarbonate	
Seal sensor	none (welded)	
Diaphragm	stainless steel 1.4542 (17-4PH)	
Media wetted parts	pressure port, seal pressure port, diaphragm	
Miscellaneous		
Weight	approx. 160 g	
Display	4-digit, red LED display, digit height 7 mm, digit width 4.85 mm (angle 10°); range of indication -1999 ... +9999; accuracy 0.1% ± 1 digit; digital damping 0.3 … 30 sec (programmable); measured value update 0.0 … 10 sec (programmable)	
Long term stability	≤ ± 0.3 % FSO / year at reference conditions	
Operational life	100 million load cycles	
CE-conformity	EMC Directive: 2014/30/EU	Pressure Equipment Directive: 2014/68/EU (module A) [2]

[2] *This directive is only valid for devices with maximum permissible overpressure > 200 bar.*

Wiring diagram / pin configuration

3-wire-system (current)

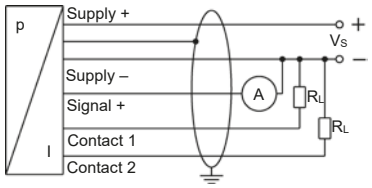

Electrical connections	M12x1, plastic (5-pin)
Supply +	1
Supply –	3
Signal + (only 3-wire)	2
Contact 1	4
Contact 2	5
Shield	via pressure port

Dimensions (mm / in)

top view

Rotatability of display module

Mechanical connection (dimensions mm / in)

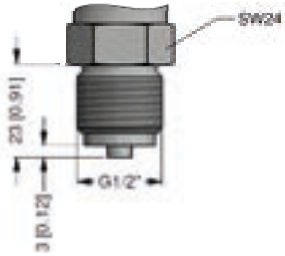

G1/2" EN 837

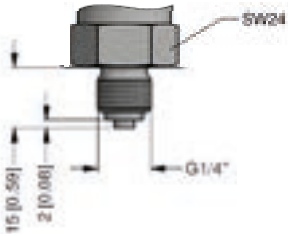

G1/4" EN 837

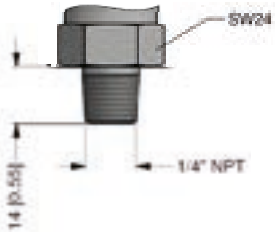

1/4" NPT

DS 217

Ordering Code

Ordering code DS 217

DS 217 ☐☐☐-☐☐☐☐-☐-☐-☐-☐☐☐-☐☐☐-☐-☐☐☐

Pressure																								
gauge	7	8	P																					
Input [bar]																								
6				6	0	0	1																	
10				1	0	0	2																	
16				1	6	0	2																	
25				2	5	0	2																	
40				4	0	0	2																	
60				6	0	0	2																	
100				1	0	0	3																	
160				1	6	0	3																	
250				2	5	0	3																	
400				4	0	0	3																	
600				6	0	0	3																	
customer				9	9	9	9																	consult
Analogue output																								
without analogue output								0																
4 … 20 mA / 3-wire								7																
customer								9																consult
Contact																								
1 contact										1														
2 contacts										2														
Accuracy																								
0.5 % FSO												5												
customer												9												consult
Electrical connection																								
male plug M12x1 (5-pin) / plastic version														N	0	1								
customer														9	9	9								consult
Mechanical connection																								
G 1/2" EN837																	2	0	0	2				
G1/4" EN 837																	4	0	0	2				
1/4" NPT																	N	4	0	2				
customer																	9	9	9	9				consult
Special version																								
standard																					0	0	0	
oxygen application																					0	0	7	
customer																					9	9	9	consult

DS 230

Electronic OEM Pressure Switch

Applications:

- pneumatics
- pumps and hydraulic machines

Characteristics:

- nominal pressure ranges from 0 … 2 bar up to 0 … 400 bar
- display and housing rotatable
- up to 2 contacts
- configurable via display
- optional: analogue output

Technical Data

Input pressure range									
Nominal pressure gauge	[bar]	2	5	10	20	50	100	250	400
Overpressure	[bar]	4	10	20	40	100	200	400	600
Burst pressure	[bar]	7	15	35	70	150	250	450	650
Supply									
Supply voltage V_S		24 V_{DC} ±10 %							
Current consumption		< 40 mA (without analogue output and without contacts)							
Output signal									
Number, type		standard: 1 PNP contact			optional: max. 2 independent PNP contacts; 1 analogue output				
Contact (standard)									
Switching current		standard: contact rating max. 125 mA, short-circuit resistant							
Accuracy of contacts [1]		≤ ± 1.5 % FSO BFSL							
Repeatability [1]		≤ ± 0.5 % FSO BFSL							
Switching frequency		max. 100 Hz							
Switching cycles		> 100 x 10^6							
Functions		hysteresis- / compare mode			n/o / n/c				
Delay time		0 ... 99.99 sec							
Analogue output (optionally)									
Signal output		4 ... 20 mA (3-wire)							
Linearity, hysteresis, repeatability		≤ ± 0.5 % FSO BFSL							
Calibration accuracy		≤ ± 1 % FSO BFSL (2 % FSO)							
Permissible load		R_{max} = 500 Ω							
Response time		< 10 msec							
[1] depending on nominal pressure range									
Thermal effects (offset and span)									
Thermal error for offset		≤ ± 0.5 % FSO / 10 K			in compensated range 0 ... 85 °C				
Permissible temperatures									
Medium		-25 ... 125 °C							
Electronics / environment		-25 ... 85 °C							
Storage		-40 ... 85 °C							

Electrical protection	
Short-circuit protection	permanent
Reverse polarity protection	no damage, but also no function
Electromagnetic compatibility	emission and immunity according to EN 61326
Mechanical stability	
Vibration	10 g RMS (25 ... 2000 Hz) according to DIN EN 60068-2-6
Shock	500 g / 1 msec according to DIN EN 60068-2-27
Materials	
Pressure port / housing	stainless steel 1.4301 (304)
Display housing	PA 6.6, Polycarbonate
Seals (media wetted)	FKM others on request
Diaphragm	ceramic Al_2O_3 96 %
Touchpad	polyester
Media wetted parts	pressure port, seals, diaphragm
Miscellaneous	
Display	4-digit, red LED display, digit size 7 mm, digit width 4.85 mm (angle 10 °); range of indication -1999 ... +9999; accuracy 0.3 % ±1 digit; digital damping 0.3 … 30 sec (programmable); measured value update 0.0 … 10 sec (programmable)
Weight	approx. 180 g
Installation position	any
Ingress protection	IP 65
Operational life	100 million load cycles
CE-conformity	EMC Directive: 2014/30/EU Pressure Equipment Directive: 2014/68/EU (module A) [2]

[2] *This directive is only valid for devices with maximum permissible overpressure > 200 bar*

Wiring diagram / pin configuration

3-wire-system (current)

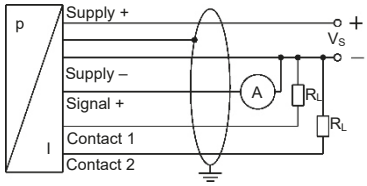

Electrical connections	M12x1, plastic (5-pin)
Supply +	1
Supply –	3
Signal + (only 3-wire)	2
Contact 1	4
Contact 2	5
Shield	via pressure port

Dimensions (mm / in)

top view

Rotatability of display module

Mechanical connection (dimensions mm / in)

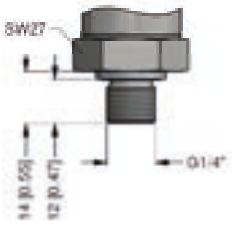

G1/4" DIN 3852

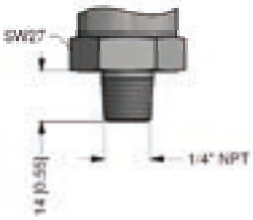

1/4" NPT

Ordering code DS 230

DS 230 ☐☐☐-☐☐☐☐-☐-☐-☐-☐☐☐-☐☐☐-☐-☐☐☐

Pressure																										
gauge	7	8	R																							
Input	**[bar]**																									
2				2	0	0	1																			
5				5	0	0	1																			
10				1	0	0	2																			
20				2	0	0	2																			
50				5	0	0	2																			
100				1	0	0	3																			
250				2	5	0	3																			
400				4	0	0	3																			
customer				9	9	9	9																			consult
Analogue output																										
without analogue output								0																		
4 … 20 mA / 3-wire								7																		
customer								9																		consult
Contact																										
1 contact									1																	
2 contacts									2																	
Calibration accuracy																										
2 % FSO										G																
customer										9																consult
Electrical connection																										
male plug M12x1 (5-pin) / plastic version												N	0	1												
customer												9	9	9												consult
Mechanical connection																										
G1/4" DIN 3852															3	0	0									
1/4" NPT															N	4	0									
customer															9	9	9									consult
Seal																										
FKM																		1								
customer																		9								consult
Special version																										
standard																			0	0	0					
customer																			9	9	9					consult

iS 4

Electronic OEM Pressure Switch Pneumatics with IO-Link Interface

Applications:

- Pneumatics
- Vacuum technology

Characteristics:

- nominal pressure range 0 ... 10 bar
- compact design
- IO-Link according to specification V 1.1

Technical Data

Input pressure range		
Nominal pressure gauge	[bar]	10
Overpressure	[bar]	13

Output signal / Supply	
Standard	IO-Link (measured value and status transmission) / V_S = 18 ... 30 V_{DC} SIO (switching output), status indication via LED (green)
IO-Link	V 1.1 / Slave / Smart Sensor Profile
Data transfer	COM2 38.4 kbit/s
Mode	SIO / IO-Link (COMx)
Standard	IEC 61131-2, IEC 61131-9

Performance			
Accuracy [1]	≤ ± 0.5 % FSO		
Switching current (SIO-Mode)	max. 200 mA		
Switching frequency	max. 200 Hz		
Switching cycles	> 100 x 10^6		
Long term stability	≤ ± 0.3 % FSO / year at reference conditions		
Turn-on time	SIO mode: ca. 20 msec		
Response time	SIO mode: < 4 msec		
Measuring rate	400 Hz		
[1] accuracy according to IEC 60770 – limit point adjustment (non-linearity, hysteresis, repeatability)			
Thermal effects (offset and span) / Permissible temperatures			
Tolerance band	≤ ± 2 % FSO	in compensated range 0 ... 50 °C	
TC, average	≤ ± 0.4 % FSO / 10 K	in compensated range 0 ... 50 °C	
Permissible temperatures	medium / electronics / environment: -25 ... 85 °C		storage: -40 ... 85 °C
Electrical protection			
Short-circuit protection	permanent		
Reverse polarity protection	no damage, but also no function		
Electromagnetic compatibility	emission and immunity according to EN 61326		

Mechanical stability		
Vibration	10 g RMS (20 ... 2000 Hz)	according to DIN EN 60068-2-6
Shock	100 g / 11 msec	according to DIN EN 60068-2-27
Materials		
Pressure port	aluminium	
Housing	PA 6.6 black	
Seal	NBR	
Sensor	silicon, RTV	
Media wetted parts	pressure port, seal, sensor	
Miscellaneous		
Media	compressed air, non-aggressive gases	
Weight	approx. 25 g	
Current consumption	max. 15 mA	
Operational life	100 million load cycles	
Installation position	any	
Ingress protection	IP 54	
CE-conformity	EMC Directive: 2014/30/EU	

Wiring diagram

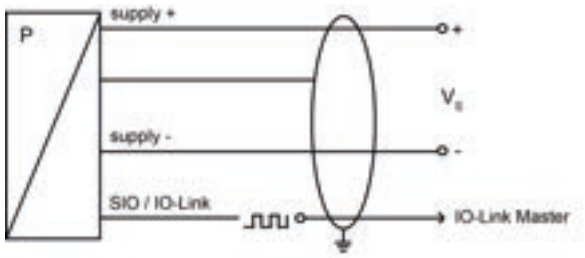

Pin configuration		
Electrical connection		M8x1 / metal (4-pin)
(L+)	Supply +	1
(L-)	Supply –	3
C/Q	IO-Link (COMx) / SIO	4
	Shield	housing

Dimensions (mm / in)

Mechanical connections (view X)

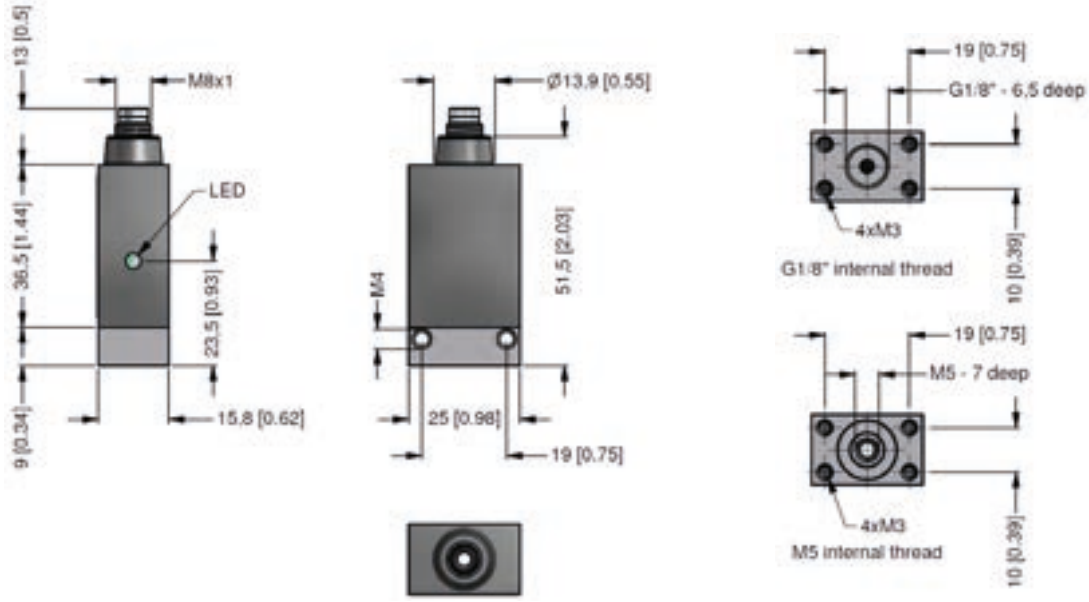

IO-Link interface

1. General device information

Baud rate	COM2 (38.4 kbit/s)
Input process data length	2 byte
Minimum cycle time	5 msec
IO-Link version	V 1.1
SIO mode	yes

2. SIO mode (standard IO mode)

In this mode the sensor operates like a normal pressure sensor with standard output signals. The digital output is always on Pin 4 of the connector plug.

3. IO-Link mode (communication mode)

The pressure sensor switches into IO-Link communication mode when operating under an IO-Link master. IO-Link communication is only possible via Pin connector.

4. Process data

The process data length of the sensor is 16 bits. The switch state (BCD1) as well as the current measured values are transmitted. The 14 bits of the measured value are scaled according to the measuring range.

15 bit	14 … 2	1	0
Signed Bit	measurement	0	BDC1 / output 1

5. Error message

Error Codes	Description
0x8011	Index not available
0x8012	Subindex not available
0x8023	Access Denied
0x8030	Parameter Value out of Range
0x8033	Parameter length overrun
0x8034	Parameter length underrun

6. Event codes

	Event-Codes IO-Link 1.1	Event-Codes IO-Link 1.0	Device status	Type
No malfunction	0x0000	0x0000	0	Notification
General malfunction-unknown error	0x1000	0x1000	4	Error
Process variable range over-run - Process Data uncertain	0x8C10	0x8C10	2	Warning
Process variable range under-run. Process Data uncertain	0x8C30	0x8C10	2	Warning

7. Parameter data (The parameter data for the pressure sensor correspond to the Smart Sensor profile.)

Index hex	Subindex hex	Object name	Single Value	Default	Comment
0x02	0x00	System Commands	0x81 = delete Min-/Max-Wert 0x82 = res 0xA0 = Set0		The action is executed by writing in the subindex
0x03	0x00	Data Storage Index	0x01: Upload Start 0x02: Upload End 0x03: Download Start 0x04: Download End 0x05: Datastorage Break		
0x0C	0x00	Device Access Lock	0x00: Unlocked 0x01: IO-Link Lock 0x02: Datastorage Lock 0x04: Parameterization Lock 0x08: User Interface Lock 0x03: IO-Link Lock + Datastorage Lock 0x05: IO-Link Lock + Parameterization Lock 0x09: IO-Link Lock + User Interface Lock 0x06: Datastorage Lock + Parameterization Lock 0x0A: Datastorage Lock + User Interface Lock 0x07: Datastorage Lock + IO-Link Lock + Parameterization Lock 0x0B: Datastorage Lock + IO-Link Lock + User Interface Lock	0x00: Unlocked	
0x24	0x00	Device Status	0x00 Device is operating properly 0x02 Out-of-Specification 0x04 Failure		
0x3D	0x02	Switch Point mode	0x80: Hysteresis NO 0x81: Hysteresis NC 0x82: Window NO 0x83: Window NC	0x80: HNo	

Index hex	Subindex hex	Object name	Access	Length	Value Range	Gradient	Unit	Default
0x3C	0x01	SetPoint 1 = SP	R/W	2 Byte	Process Data			100%
0x3C	0x02	SetPoint 2 = rP	R/W	2 Byte	Process Data			0%
0xD0	0x00	Delay Switching Time	R/W	2 Byte	0 ... 500	0.1	sec	0
0xD1	0x00	Delay Back Switching Time	R/W	2 Byte	0 ... 500	0.1	sec	0
0xD5	0x00	Min Pressure Value	R	2 Byte	Process Data			
0xD6	0x00	Max Pressure Value	R	2 Byte	Process Data			
0xD7	0x00	Measure damping	R/W	2 Byte	0…1000 in 10 ms steps	1	msec	0

Ordering code iS 4

iS 4 ☐☐☐-☐☐☐☐-☐-☐☐☐-☐☐☐-☐-☐☐☐

Pressure		
gauge	6 8 S	
Input	**[bar]**	
10	1 0 0 2	
customer	9 9 9 9	consult
Signal output		
IO-Link / SIO	IO	
Electrical connection		
M8x1 (4-pin) / metal	Q 0 0	
customer	9 9 9	consult
Mechanical connection		
G1/8" internal thread	Q 0 0	
M5 internal thread with slot for O-ring [1]	R 0 0	
customer	9 9 9	consult
Seals		
NBR	5	
customer	9	consult
Special version		
standard	0 0 0	
customer	9 9 9	consult

[1] suitable for flange installation

DS 4

Electronic OEM Pressure Switch Pneumatics

Applications:

- Pneumatics
- Vacuum technology

Characteristics:

- nominal pressure ranges from 0 ... 1 bar up to 0 ... 10 bar also 0 ... -1 bar
- 1 or 2 contacts
- compact design
- configurable via PC or programming device P6

Technical Data

Input pressure range					
Nominal pressure gauge	[bar]	0 ... -1	1	3.5	10
Overpressure	[bar]	2	2	7	13

Supply	
Supply voltage	V_S = 12 ... 30 V_{DC}
Current consumption	max. 14 mA (without contacts)
Output signal / Contact [1]	
Number	standard: 1 option: 2
Type	PNP
Switching performance	max. 300 mA, short-circuit proof
Accuracy of contacts [2]	≤ ± 1 % FSO
Repeatability	≤ ± 0.2 % FSO
Status indication	SP 1: green SP 2: yellow
Switching function [3]	standard: n/o option: n/c
Switching mode [3]	standard: hysteresis mode option: window mode
Switch on point [3]	standard: factory setting 80 % FSO others: specify on order; adjustable range 0 ... 100 % FSO
Switch off point [3]	standard: factory setting 75 % FSO others: specify on order; adjustable range 0 ... 100 % FSO
Switch on / switch off delay [3]	standard: off others: specify on order, adjustable range from 10 msec up to 90 sec (step 10 msec)
Switching frequency	200 Hz (without switching delay)
Switching cycles	> 100 x 10^6

[1] with optional analogue output max. 1 contact possible
[2] accuracy according to IEC 60770 – limit point adjustment (non-linearity, hysteresis, repeatability)
[3] Parameters can be programmed by customer either with the programming kit CIS680/CIS681 or with the programming device P6 (available as accessories).

Output signal / Analogue output [1] (optionally)		
Analogue output	1 ... 5 V / 3-wire	
Accuracy [2]	≤ ± 2 % FSO	
Permissible load	R_{min} = 10 kΩ	
[1] with optional analogue output max. 1 contact possible *[2] accuracy according to IEC 60770 – limit point adjustment (non-linearity, hysteresis, repeatability)*		
Thermal effects (offset and span)		
Tolerance band	≤ ± 2 % FSO	in compensated range 0 ... 50 °C
TC, average	≤ ± 0.4 % FSO / 10 K	in compensated range 0 ... 50 °C
Permissible temperatures		
Medium	-25 ... 85 °C	
Electronics / environment	-25 ... 85 °C	
Storage	-40 ... 85 °C	
Electrical protection		
Short-circuit protection	permanent	
Reverse polarity protection	no damage, but also no function	
Electromagnetic compatibility	emission and immunity according to EN 61326	
Mechanical stability		
Vibration	10 g RMS (20 ... 2000 Hz)	according to DIN EN 60068-2-6
Shock	100 g / 11 msec	according to DIN EN 60068-2-27
Materials		
Pressure port	aluminium	
Housing	PA 6.6 black	
Seal (media wetted)	NBR	
Sensor	silicon, RTV	
Media wetted parts	pressure port, seal, sensor	
Miscellaneous		
Media	compressed air, non-aggressive gases	
Weight	approx. 50 g	
Installation position	any	
Operational life	100 million load cycles	
Ingress protection	IP 54	
CE-conformity	EMC Directive: 2014/30/EU	

Wiring diagrams

1 contact, without analogue output

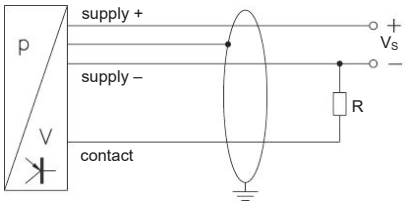

2 contacts, without analogue output

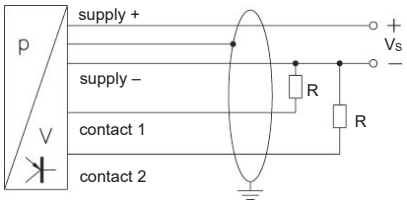

1 contact, with analogue output

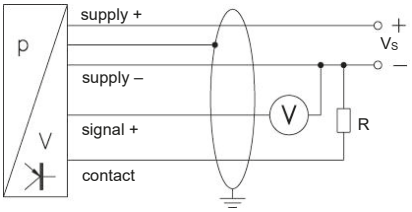

Pin configuration				
Electrical connection	M8x1 / metal (4-pin)			
	1 contact	2 contacts	1 contact, 1 analogue output	
Supply +	1	1	1	
Supply –	3	3	3	
Signal +	-	-	2	
Contact 1	4	4	4	
Contact 2	-	2	-	
Shield	housing	housing	housing	

Dimensions (mm / in)

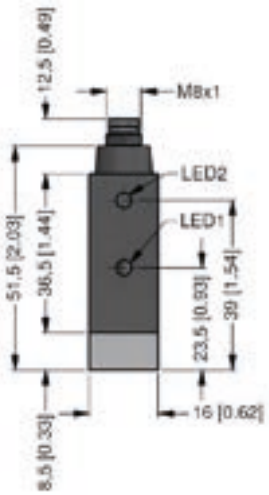

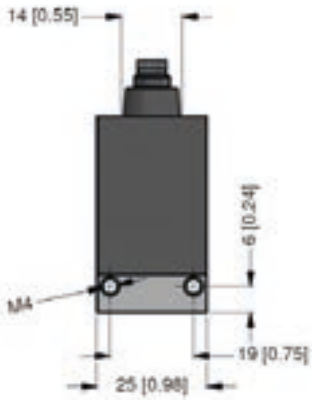

Mechanical connections (dimensions mm / in)

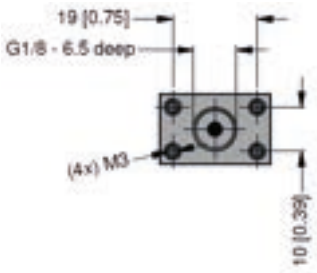

G1/8" internal thread

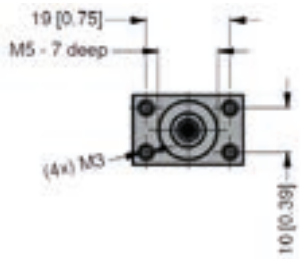

M5 internal thread

Ordering code DS 4

DS 4 □□□-□□□□-□-□-□□□-□□□-□-□□□-□□□

Pressure		
gauge	680	
Input	**[bar]**	
1.0	1001	
3.5	3501	
10	1002	
0 … -1	Z102	
customer	9999	consult
Number of contacts		
1 contact	1	
2 contacts [1]	2	
Analogue output		
without analogue output	0	
1 … 5 V / 3-wire [1]	C	
Electrical connection		
M8x1 (4-pin) / metal	Q00	
customer	999	consult
Mechanical connection		
G1/8" internal thread	Q00	
M5 internal thread with slot for O-ring [2]	R00	
customer	999	consult
Seal		
NBR	5	
customer	9	consult
Setting code		
BD SENSORS standard [3]	000	
setting according to customer [3]	999	consult
Special version		
standard	000	
customer	999	consult

[1] with optional analogue output max. 1 contact possible
[2] suitable for flange installation
[3] Parameters can be programmed by customer either with the programming kit CIS 680 / CIS 681 or with the programming device P6 (available as accessories).

DS 5

Electronic OEM Pressure Switch Heavy Duty

Applications:

- mobile hydraulics
- presses
- oxygen application

Characteristics:

- stainless steel sensor, welded
- nominal pressure ranges from 0 … 16 bar up to 0 … 600 bar
- configurable via PC or programming device P6
- optionally: oil and grease free version

Technical Data

Input pressure range										
Nominal pressure gauge	[bar]	16	25	40	60	100	160	250	400	600
Overpressure (static)	[bar]	50	50	80	120	200	320	500	800	1200
Burst pressure ≥	[bar]	125	125	200	300	500	800	1250	2000	2000

Supply		
Supply voltage	V_S = 12 ... 30 V_{DC}	
Current consumption	max. 14 mA (without contacts)	
Contacts		
Number	standard: 1	option: 2
Type	PNP	
Switching performance	max. 300 mA, short-circuit proof	
Accuracy of contacts	IEC 60770: ≤ ± 1 % FSO	
Repeatability	≤ ± 0.2 % FSO	
Minimum hysteresis of contacts	≤ ± 0.5 % FSO	
Status indication	SP 1: green	SP 2: yellow
Switching function [1]	standard: n/o	option: n/c
Switching mode [1]	standard: hysteresis mode	option: window mode
Switch on point [1]	standard: factory setting 80 % FSO others: specify on order; adjustable range 5 ... 100 % FSO	
Switch off point [1]	standard: factory setting 75 % FSO others: specify on order; adjustable range 5 ... 100 % FSO	
Switch on / switch off delay [1]	standard: off others: specify on order, adjustable range from 10 msec up to 90 sec (step 10 msec)	
Switching frequency	200 Hz (without switching delay)	
Switching cycles	> 100 x 10^6	
[1] Parameters can be programmed by customer either with the programming kit CIS-G or with the programming device P6 (available as accessories).		
Thermal effects (offset and span) / Permissible temperatures		
Thermal error	≤ ± 0.2 % FSO / 10 K	in compensated range -20 ... 80 °C
Permissible temperatures	medium: -40 ... 125 °C	electronics / environment / storage: -40 ... 85 °C

Electrical protection		
Short-circuit protection	permanent	
Reverse polarity protection	no damage, but also no function	
Electromagnetic compatibility	emission and immunity according to EN 61326	
Mechanical stability		
Vibration	10 g RMS (20 ... 2000 Hz)	according to DIN EN 60068-2-6
Shock	100 g / 11 msec	according to DIN EN 60068-2-27
Materials		
Pressure port	stainless steel 1.4404 (316L)	
Housing	stainless steel 1.4305 (303)	
Seal of pressure port	FKM	others on request
Seal of sensor	none (welded)	
Sensor	stainless steel 1.4548 (17-4PH)	
Media wetted parts	pressure port, seal, sensor	
Miscellaneous		
Oxygen application	option for mechanical connections 1/4" NPT, R 1/4" and 7/16"-20 UNF (on request)	
Weight	approx. 90 g	
Installation position	any	
Operational life	100 million load cycles	
Ingress protection	IP 67	
CE-conformity	EMC Directive: 2014/30/EU	Pressure Equipment Directive: 2014/68/EU (module A) [2]

[2] *This directive is only valid for devices with maximum permissible overpressure > 200 bar*

Wiring diagrams

1 contact

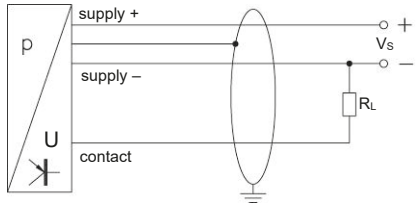

2 contacts

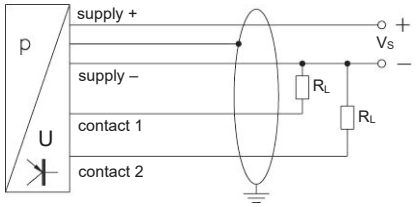

Pin configuration

Electrical connection	M12x1 (4-pin), metal
Supply +	1
Supply –	3
Contact 1	4
Contact 2	2
Shield	plug housing

Dimensions / Mechanical connections (mm / in)

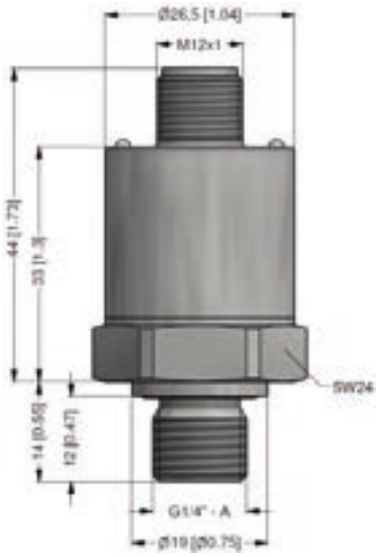

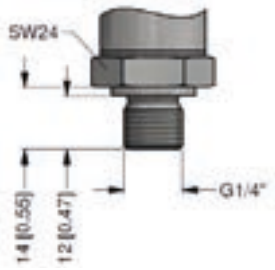

G1/4" DIN 3852

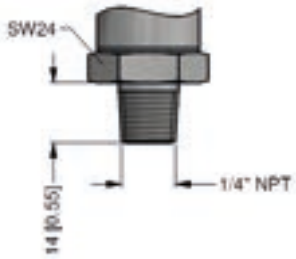

1/4" NPT

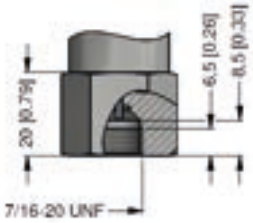

7/16-20 UNF female thread

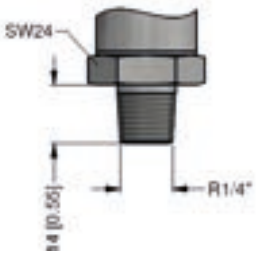

R 1/4"

DS 5

Ordering Code

Ordering code DS 5

DS 5 ☐☐☐ - ☐☐☐☐ - ☐ - ☐☐☐ - ☐☐☐ - ☐ - ☐☐☐ - ☐☐☐

Pressure																								
gauge	6	8	M																					
Input	**[bar]**																							
16				1	6	0	2																	
25				2	5	0	2																	
40				4	0	0	2																	
60				6	0	0	2																	
100				1	0	0	3																	
160				1	6	0	3																	
250				2	5	0	3																	
400				4	0	0	3																	
600				6	0	0	3																	
customer				9	9	9	9																	consult
Number of contacts																								
1 contact								1																
2 contacts								2																
Electrical connection																								
M12x1 (4-pin), metal									M	1	3													
customer									9	9	9													consult
Mechanical connection / Seal																								
G1/4" DIN 3852 / on pressure port: FKM												3	0	0		P								
customer												9	9	9		9								consult
Setting code																								
BD SENSORS standard [1]																	0	0	0					
setting according to customer [1]																	9	9	9					consult
Special version																								
standard																				0	0	0		
customer																				9	9	9		consult

[1] Parameters can be programmed by customer either with the programming kit CIS-G or with the programming device P6 (available as accessories).

DS 6

Electronic OEM Pressure Switch

Applications:

- mechanical engineering / hydraulics
- measuring, control and process technology

Characteristics:

- nominal pressure ranges from 0 … 2 bar up to 0 … 400 bar
- 1 or 2 contacts
- configurable via PC or programming device P6
- optional: oil- and grease free version

Technical Data

Input pressure range									
Nominal pressure gauge	[bar]	2	5	10	20	50	100	200	400
Nominal pressure abs.	[bar]	2	5	10	20	50	100	200	400
Overpressure	[bar]	7	12	25	50	120	250	400	600
Supply									
Supply voltage		V_S = 12 ... 30 V_{DC}							
Current consumption		max. 14 mA (without contacts)							
Contacts									
Number		standard: 1					option: 2		
Type		PNP							
Switching performance		max. 300 mA, short-circuit proof							
Accuracy of contacts		IEC 60770: ≤ ± 1 % FSO							
Repeatability		≤ ± 0.2 % FSO							
Minimum hysteresis of contacts		≤ ± 0.5 % FSO							
Status indication		SP 1: green					SP 2: yellow		
Switching function [1]		standard: n/o					option: n/c		
Switching mode [1]		standard: hysteresis mode					option: window mode		
Switch on point [1]		standard: factory setting 80 % FSO others: specify on order; adjustable range 5 ... 100 % FSO							
Switch off point [1]		standard: factory setting 75 % FSO others: specify on order; adjustable range 5 ... 100 % FSO							
Switch on / switch off delay [1]		standard: off others: specify on order, adjustable range from 10 msec up to 90 sec (step 10 msec)							
Switching frequency		200 Hz (without switching delay)							
Switching cycles		> 100 x 10^6							
[1] Parameters can be programmed by customer either with the programming kit CIS-G or with the programming device P6 (available as accessories).									
Thermal effects (offset and span) / Permissible temperatures									
Thermal error		≤ ± 0.3 % FSO / 10 K					in compensated range 0 ... 85 °C		
Permissible temperatures		medium / electronics / environment: -25 ... 85 °C					storage: -40 ... 85 °C		

Electrical protection		
Short-circuit protection	permanent	
Reverse polarity protection	no damage, but also no function	
Electromagnetic compatibility	emission and immunity according to EN 61326	
Mechanical stability		
Vibration	10 g RMS (20 ... 2000 Hz)	according to DIN EN 60068-2-6
Shock	100 g / 11 msec	according to DIN EN 60068-2-27
Materials		
Pressure port	stainless steel 1.4301 (304)	
Housing	stainless steel 1.4305 (303)	
Seals (media wetted)	standard: FKM	option: EPDM
Diaphragm	ceramic Al_2O_3 96 %	
Media wetted parts	pressure port, seals, diaphragm	
Miscellaneous		
Weight	approx. 90 g	
Installation position	any	
Operational life	100 million load cycles	
Ingress protection	IP 67	
CE-conformity	EMC Directive: 2014/30/EU	Pressure Equipment Directive: 2014/68/EU (module A) [2]

[2] This directive is only valid for devices with maximum permissible overpressure > 200 bar

Wiring diagrams

1 contact

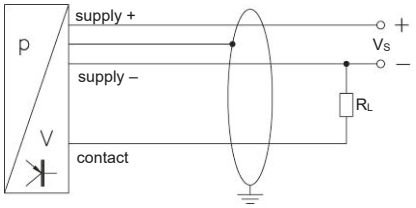

2 contacts

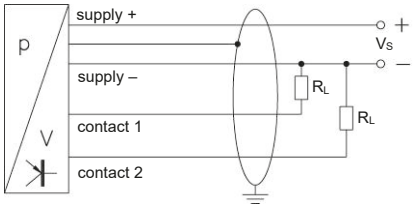

Pin configuration

Electrical connection	M12x1 (4-pin), metal		M8x1 (4-pin), metal	
Supply +	1		1	
Supply –	3		3	
Contact 1	4		4	
Contact 2	2		2	
Shield	plug housing		plug housing	

Dimensions (mm / in)

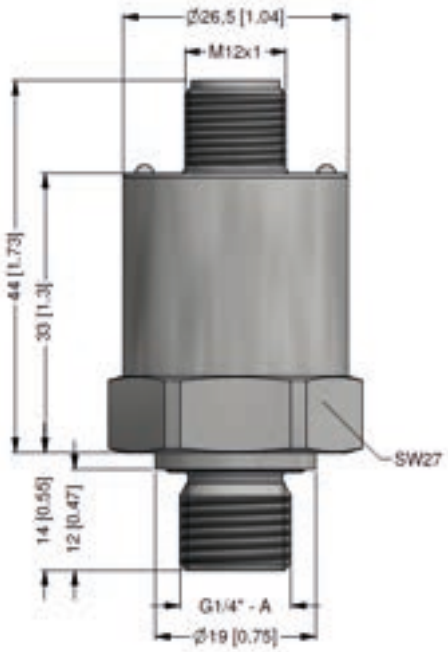

G1/4" DIN 3852
with male plug M12x1

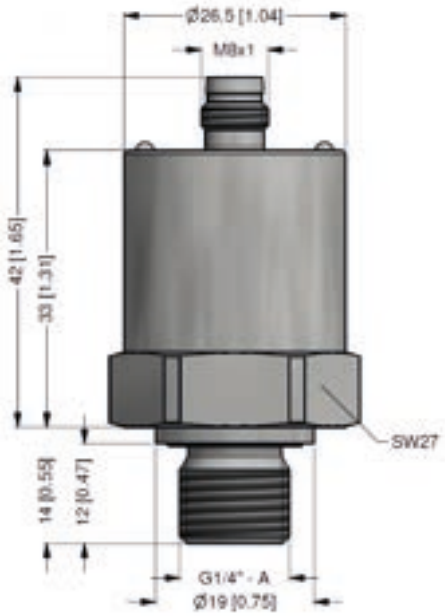

G1/4" DIN 3852
with male plug M8x1

Ordering code DS 6

DS 6 □□□-□□□□-□-□-□□□-□□□-□-□□□-□□□

Pressure																														
gauge	6	8	5																											
absolute	6	8	6																											
Input	**[bar]**																													
2				2	0	0	1																							
5				5	0	0	1																							
10				1	0	0	2																							
20				2	0	0	2																							
50				5	0	0	2																							
100				1	0	0	3																							
200				2	0	0	3																							
400				4	0	0	3																							
customer				9	9	9	9																							consult
Number of contacts																														
1 contact								1																						
2 contacts								2																						
Analogue output																														
without analogue output										0																				
Electrical connection																														
M12x1 (4-pin), metal												M	1	3																
M8x1 (4-pin), metal												Q	0	0																
customer												9	9	9																consult
Mechanical connection																														
G1/4" DIN 3852															3	0	0													
customer															9	9	9													consult
Seal																														
FKM																		1												
EPDM																		3												
customer																		9												consult
Setting code																														
BD SENSORS standard [1]																			0	0	0									
setting according to customer [1]																			9	9	9									consult
Special version																														
standard																								0	0	0				
oil and grease free																								0	0	8				
customer																								9	9	9				consult

[1] Parameters can be programmed by customer either with the programming kit CIS-G or with the programming device P6 (available as accessories).

COMPETENCE

Industrial pressure measurement technology from 0.1 mbar up to 8000 bar

- pressure transmitters, electronic pressure switches or hydrostatic level probes
- OEM or high-end products
- standard products or customized solutions

BD|SENSORS has the right pressure measuring device at the right price.

PRICE / PERFORMANCE

Pressure measurement at the highest level

The concentration on electronic pressure transmitter has led to extraordinary efficiency and economical pricing.

BD|SENSORS is certain to be one of the most economical suppliers on the world market, given equal technical and commercial conditions.

RELIABILITY

Projectable delivery times and strict observance of deadlines

Short delivery times and firm deadlines, even for special designs, make BD|SENSORS a reliable partner for our customers.

BD|SENSORS reduces the level of your stock-keeping and increases your profitability.

FLEXIBILITY

We have special solutions for your individual requirement.

We solve your problem in industrial pressure measurement quickly and economically, not only with large-scale production lines, but also for smaller requirements.

BD|SENSORS is especially flexible when technical support and quick assistance are required in service case as well as for rush orders.

INDUSTRIES

- plant and machine engineering
- chemical and biochemical industry
- energy industry
- renewable energy
- semiconducter industry / cleanroom technology
- HVAC
- hydraulics
- refrigeration
- calibration techniques
- laboratory techniques
- medical technology
- food and beverage
- vehicles and mobile hydraulics
- oil and gas industry
- pharmaceutical industry
- marine / shipbuilding / offshore
- heavy industry
- environmental industry
- packaging and paper industry

MEDIA

- sewage
- aggressive media
- colours
- gases
- fuels and oils
- pasty and viscous media
- oxygen
- water

DISTRIBUTION WORLDWIDE

HEADQUARTER DER BD | SENSORS GROUP
BD | SENSORS GmbH
BD-Sensors-Straße 1
95199 Thierstein
GERMANY

Tel.: +49 9235 9811-0
Fax: +49 9235 9811-11

www.bdsensors.de
info@bdsensors.de

DISTRIBUTION EASTERN EUROPE

BD | SENSORS s.r.o.
Hradištská 817
68708 Buchlovice
CZECH REPUBLIC

Tel.: +420 572 411-011
Fax: +420 572 411-497

www.bdsensors.cz
sale@bdsensors.cz

DISTRIBUTION CHINA

BD | SENSORS China
Building B, 2nd floor,
Building 10, No. 1188, Lianhang Road
Pujiang Town, Minhang District, Shanghai
CHINA

Tel.: +86 21 51600190
Fax: +86 21 33600610

www.bdsensors-china.com
info@bdsensors-china.com

Status 07/2024
Technical changes reserved.